GUILD ◆ EDITION

Woodsmith®

Woodsmith.com

Vol. 37 / No. 217

SHOP-BUILT

MORTISING MACHINE

Mortises Made Easy!

Our Biggest Issue Ever!

More Projects, Tips & Techniques

INSIDE:

Tips & Tricks on

- Installing Drawer Slides
- Tuning Up Your Drill Press
- Using Bar Gauges

Editors' Top Picks

Table Saw Blades

Woodsmith®

PUBLISHER Donald B. Peschke

EDITOR Bryan Nelson
MANAGING EDITOR Vincent Ancona
SENIOR EDITORS Wyatt Myers, Phil Huber, Randy Maxey
ASSISTANT EDITOR Robert Kemp

EXECUTIVE ART DIRECTOR Todd Lambirth
SENIOR ILLUSTRATORS Harlan V. Clark, Dirk Ver Steeg, Peter J. Larson
SENIOR GRAPHIC DESIGNER Bob Zimmerman
GRAPHIC DESIGNER Becky Kralicek

CREATIVE DIRECTOR Ted Kralicek
ASSISTANT DESIGN DIRECTOR Chris Fitch
PROJECT DESIGNER/BUILDER John Doyle
CAD SPECIALIST Steve Johnson
SHOP CRAFTSMAN Dana Myers

SENIOR PHOTOGRAPHERS Crayola England, Dennis Kennedy
ASSOCIATE STYLE DIRECTOR Rebecca Cunningham
SENIOR ELECTRONIC IMAGE SPECIALIST Allan Ruhnke
PRODUCTION ASSISTANT Minniette Johnson
VIDEO EDITOR/DIRECTOR Mark Hayes

Woodsmith® (ISSN 0164-4114) is published bimonthly by August Home Publishing Company, 2200 Grand Ave, Des Moines, IA 50312.
Woodsmith® is a registered trademark of August Home Publishing.
Copyright© 2014 August Home Publishing Company. All rights reserved.
Subscriptions: Single copy: $6.95.
Canadian Subscriptions: Canada Post Agreement No. 40038201. Send change of address information to PO Box 881, Station Main, Markham, ON L3P 8M6. Canada BN 84597 5473 RT
Periodicals Postage Paid at Des Moines, IA, and at additional offices.
Postmaster: Send change of address to *Woodsmith*, Box 37106, Boone, IA 50037-0106.

WoodsmithCustomerService.com

ONLINE SUBSCRIBER SERVICES

- **VIEW** your account information
- **RENEW** your subscription
- **CHECK** on a subscription payment
- **PAY** your bill
- **CHANGE** your mailing or e-mail address
- **VIEW/RENEW** your gift subscriptions
- **TELL US** if you've missed an issue

CUSTOMER SERVICE **Phone: 800-333-5075**

SUBSCRIPTIONS
Customer Service
P.O. Box 842
Des Moines, IA 50304-9961
subscriptions@augusthome.com

EDITORIAL
Woodsmith Magazine
2200 Grand Avenue
Des Moines, IA 50312
woodsmith@woodsmith.com

AUGUST HOME PUBLISHING COMPANY

Printed in U.S.A.

from the editor

Sawdust

The start of a new year is always something to look forward to. Spring is just around the corner. And it's easy to imagine the shop door being open to the fresh air as you begin a new project. Well, around here we've been working on a new project of sorts — a bigger, better, improved *Woodsmith*.

For starters, you'll be getting a bigger issue. We've added 16 pages — that's more than a 30% increase. As to being better, all you need to do is take a look at the table of contents at right and you'll see an incredible mix of projects in this issue — a small, easy-to-build weekend project, an heirloom piece of furniture, and a couple of handy projects any shop could use. That's the variety of projects you can expect to see in every issue.

But we didn't stop there. You'll find that the table of contents continues on page 4 and covers the wide range of topics in this issue. We have some new departments like *Mastering the Table Saw*, where the focus will be on taking the work you do at your table saw to the next level. And we have that other shop workhorse, the router, covered as well. In *Router Workshop*, you'll find the tips, tricks, and techniques for getting the most out of your router, whether you use it hand-held or in a router table. Finally, *Great Gear* and *In the Shop* will provide even more information to create a top-notch workshop, no matter where you do your woodworking. As always, we'll continue to feature the great tips, techniques, and tools you need to know for building any project.

Since we're adding pages, it's also the perfect opportunity to make a few other improvements. Our goal is to make *Woodsmith* easier to read, handier to use, and simpler to find all the great woodworking information you're accustomed to seeing. So we've updated a few things throughout the magazine, like the look of some headlines, typefaces, and page layouts.

Overall, I'm happy and excited about the new look and the larger size of *Woodsmith*. Plus, it's a great way to give you more of what you're looking for — the best woodworking information available. Let me know what you think. And if you have any suggestions about what you would like to see included in future issues, from projects and tools to tips and techniques, drop me a line at bgnelson@augusthome.com.

Bryan

contents

No. 217 February/March 2015

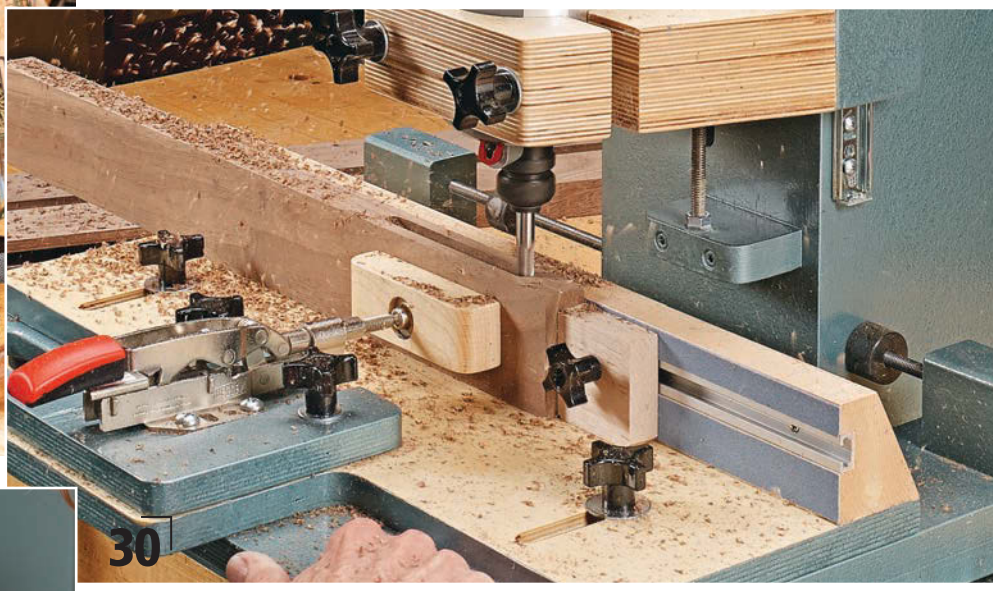

Projects

shop project

Scissor-Lift Workbench 20

Built around a foor-operated lift cart, this workbench is easy to set to any height. Plus, great clamping options and a dust collection system make it the perfect solution for any shop.

weekend project

Spice Carousel. 26

Keep your most-used spices close at hand with this rotating carousel. You'll find a lot of woodworking packed into this project along with finishing options for creating a unique look.

shop-built machines

Router Mortising Machine 30

You'll be creating precision mortises with ease using your router's motor and this shop-built machine. The secret to its smooth operation is ordinary metal drawer slides.

heirloom project

Stylish Cherry Hutch 40

With its elegant look, this tall hutch will add style and some much-needed storage to any dining room. And you'll learn a lot of great techniques and tips as you build it.

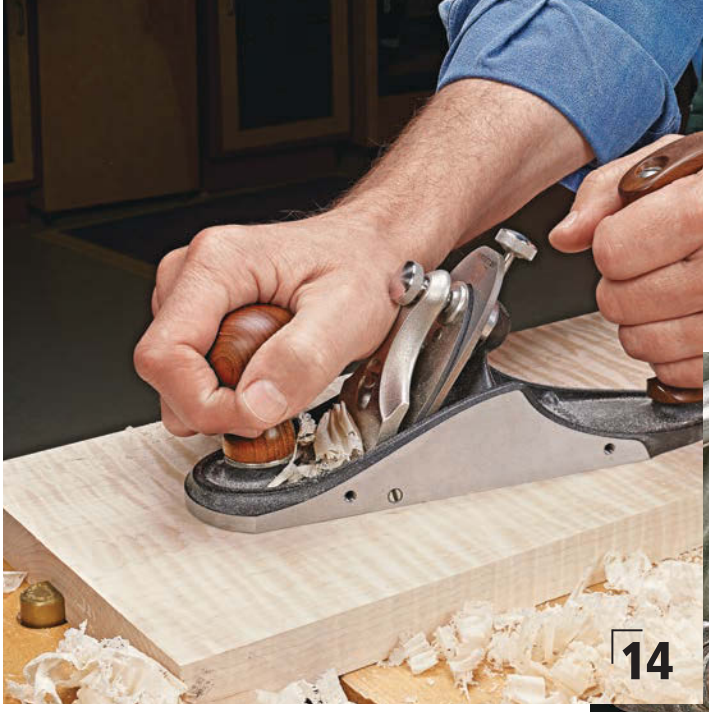

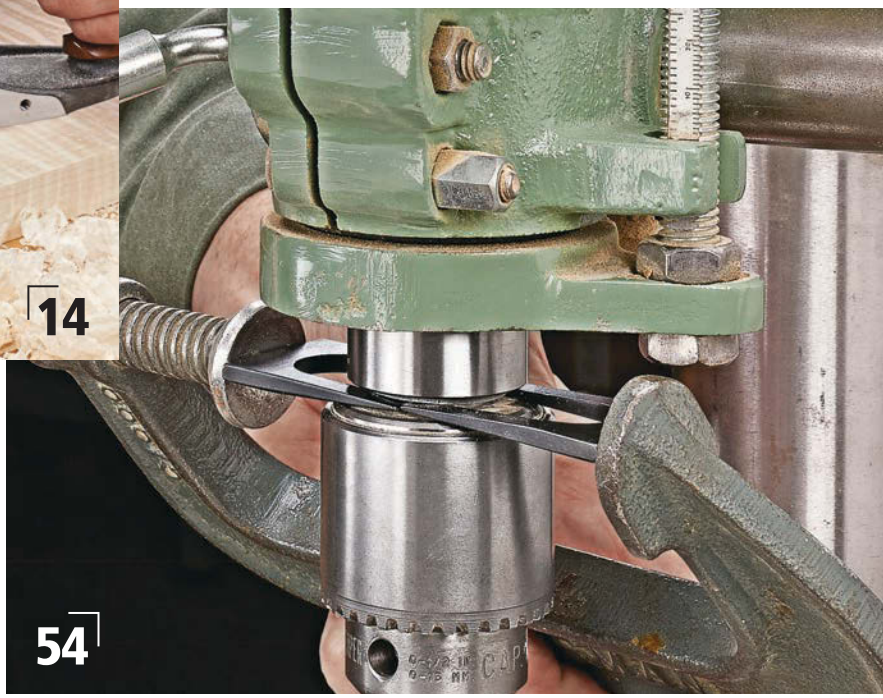

Departments

from our readers
Tips & Techniques 5

all about
Working with Bamboo. 10

router workshop
Milling Bits for Mortising 12

great gear
Creating a Custom Plane 14

woodworking technique
Installing Drawer Slides. 18

working with tools
Tuning Up a Drill Press 54

in the shop
LED Lighting Retrofit 58

woodworking essentials
Choosing & Using Bar Gauges . . 60

mastering the table saw
Saw Blade Preferences 62

tips from our shop
Shop Notes. 64

from our readers

Tips & Techniques

Cleaner Circle Cutting

Faced with the challenge of creating multiple wood discs for coasters, I needed a way to cut them out without making a center hole in the workpiece. I came up with a simple solution using a circle cutter and a scrap block.

To do it, adjust the drill bit on the circle cutter so it's higher than the depth of the cutting blade by the thickness of the workpiece, plus ⅛", as shown in Figure 1.

Use a scrap block of wood that's at least the same thickness as the workpiece from which the circle is being cut and shorter diagonally than the diameter of the circle. Locate the block in the center of the circle and use double-sided tape to hold it in place.

To keep the parts from moving as the blade makes the cut, clamp the workpiece to the drill press table. The block stabilizes the circle cutter without drilling into the workpiece blank. The disc is completely cut out when it starts to spin.

After removing the scrap block, you'll have a blank disc with no center hole. The same block can be used again to cut out multiple discs.

Min-Hao Kuo
East Lansing, MI

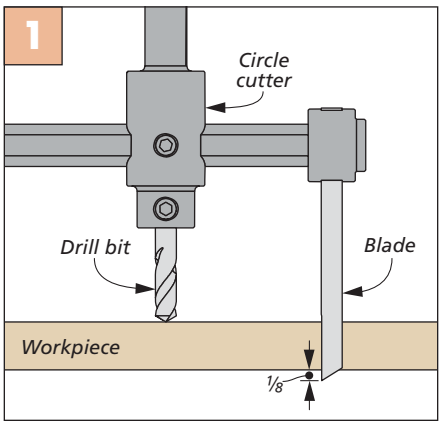

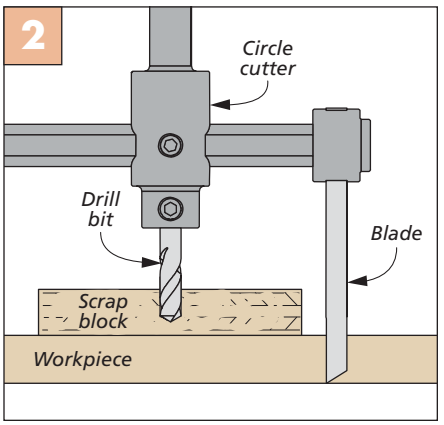

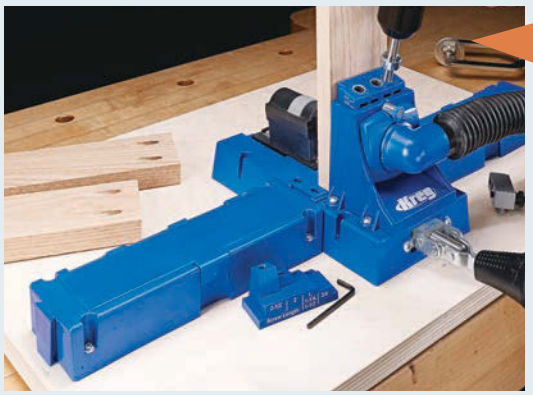

Win This Kreg K5 Jig

Simply send us your favorite shop tips. If your tip or technique is selected as the featured reader's tip, you'll win a *Kreg K5 Jig* just like the one shown here. To submit your tip or technique, just go online to *Woodsmith.com* and click on the link, "SUBMIT A TIP." There you can submit your tip and upload your photos for consideration.

The Winner!

Congratulations to Dan Breyfogle, the winner of this *Kreg K5 Jig*. To find out how you can win this jig, check out the information at left.

Small Parts Organizer

I often use several types and sizes of fasteners in the course of building a project. But often their containers end up scattered all over the workbench.

This nifty little organizer holds all the fasteners I'll need for the job at hand, keeps them in one place, and provides easy access. In addition, it has a deep tray on top for keeping larger parts and small tools handy.

The organizer has two hardboard and plywood trays with recesses for shallow containers. The recesses are sized for six-ounce tuna cans, but any other type of shallow container would be suitable. Spacer blocks keep the containers' contents visible and easy to grab.

CONTAINER TRAYS. Begin by cutting two pieces of hardboard to the dimensions shown for the container trays. Using a circle cutter at the drill press works great to make the four holes in each of the pieces. The base pieces are cut from plywood and are attached to the container trays with glue. I eased the top edge of the hardboard trays with a roundover bit.

SPACER BLOCKS. The two spacer blocks are now cut to size and glued to the container trays, as shown in detail 'a.' The middle tray has a through hole drilled in the center of the spacer, while the bottom tray has a threaded insert installed in the top of the spacer block.

TOOL TRAY & HANDLE. The tool tray at the top of the organizer is a piece of plywood with ⅛"-thick strips of hardwood for the sides. I simply glued them in place. The handle is also made from hardwood. Use the dimensions shown in detail 'b' to cut it to size and ease the top edges with a ¼" roundover bit. Glue the handle to the inside of the tool tray and drill a hole through the tray bottom into the handle for another threaded insert.

ASSEMBLY. With the parts built, screw the threaded rod into the bottom tray. Next, add the spacer block, fender washer, and middle tray. The fender washers keep the parts spinning freely. The tool tray is simply screwed in place. Now you can load up the containers with the fasteners you need for your next project.

Dan Breyfogle
Mason City, IA

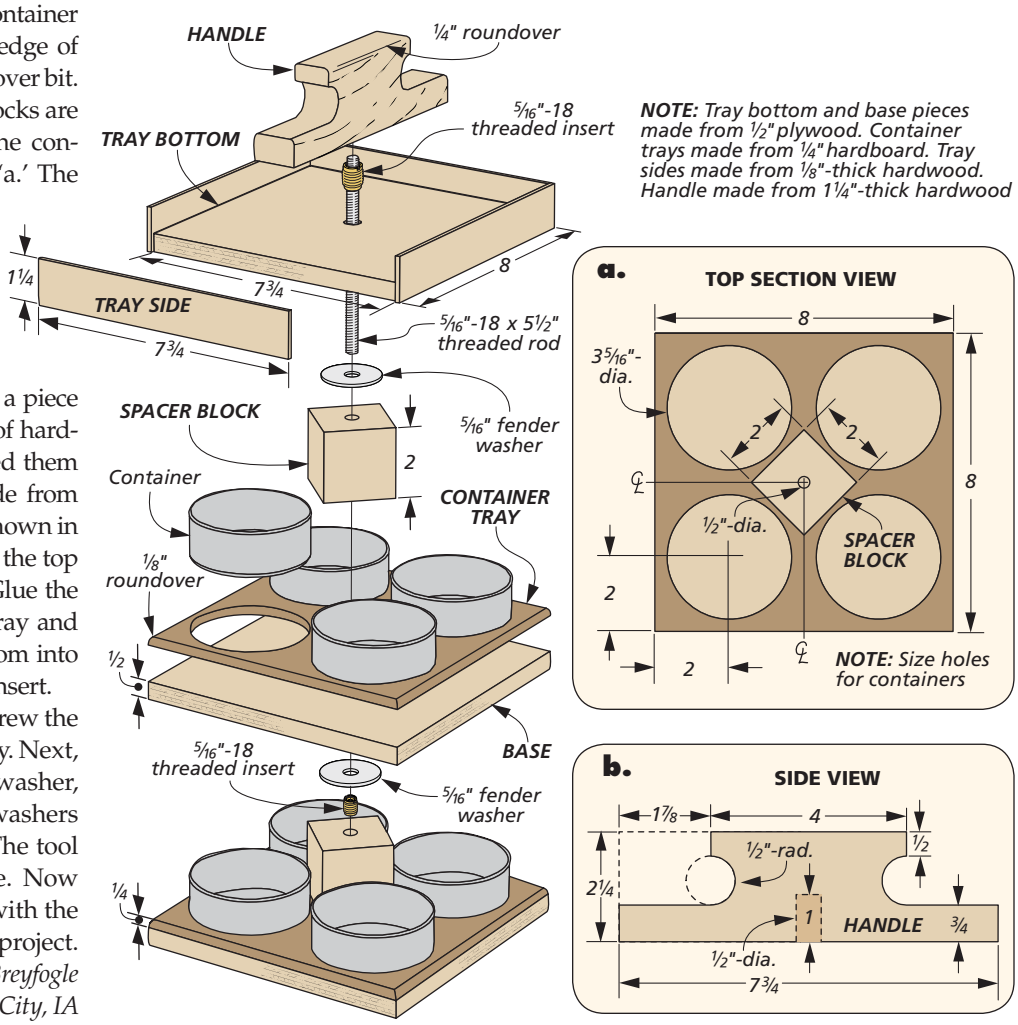

Saw Blade Caddy

I don't like to lay saw blades on the saw table when I'm swapping them out. I'm afraid the teeth will get damaged. So changing a saw blade had turned into a juggling act until I came up with this handy blade caddy. It provides a place to hang the blades so they they don't get damaged during the setup process.

EASY JOINERY. The saw blade caddy consists of four parts joined together with angled butt joints and screws. A short dowel in the face of each upright provides a way to hang the saw blades. The center handle connects the uprights and makes the caddy easy to transport around the shop.

To use the saw blade caddy, place the new blade on one side of the stand while removing the old blade from the saw. The old blade goes on the empty side of the stand while installing the new blade. If I'm only going to make a couple cuts, I just set the stand aside while I make the cuts and then reverse the whole process.

Serge Duclos
Delson, Quebec

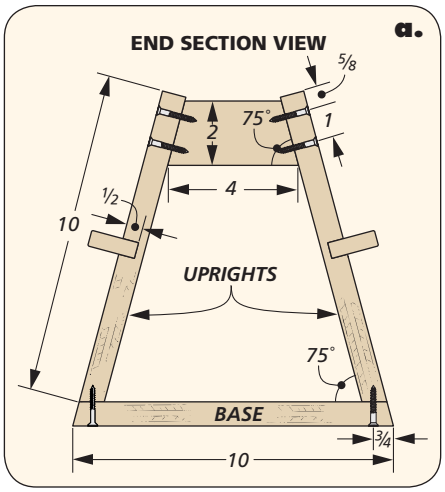

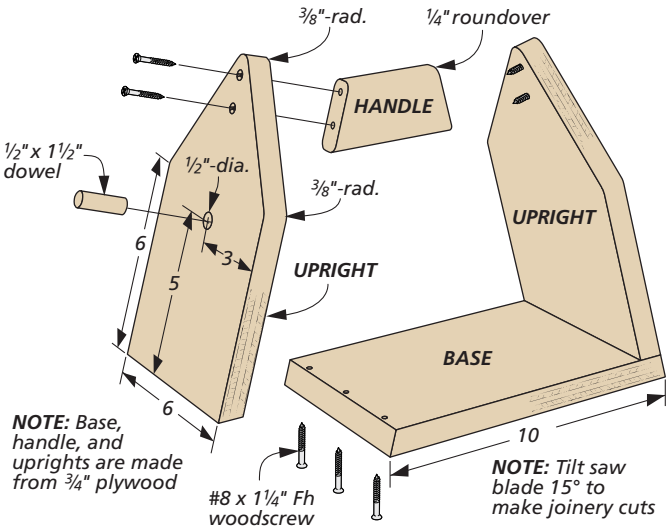

QUICK TIPS

Multi-Tool Sander. *Bill Wells* of Olympia, Washington, found the sanding accessory that came with his multi-tool too large to get into tight areas. So instead, he wraps strips of adhesive-backed sandpaper onto an old flush-cut blade. This allows him to sand the tight spots.

Band Saw Table Pin. *Bill Huber* of Haslet, Texas, got tired of looking for a wrench to remove the table pin every time he changed his band saw blade. Instead he drilled a hole in the head of the table pin and installed a solid steel pin that provides enough leverage to remove it by hand.

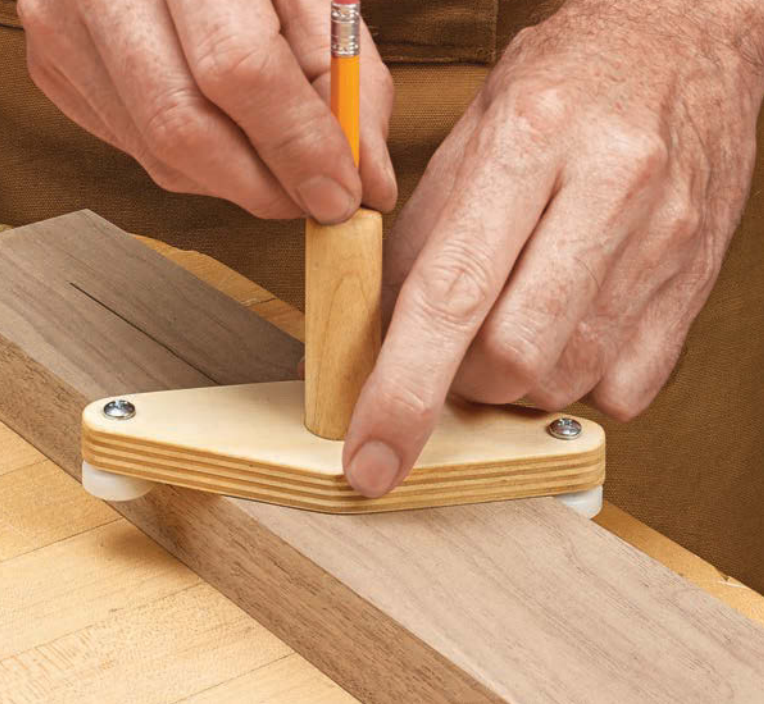

Rolling Center Finder

Over the years, I've seen (and used) many different kinds of center-finding tools. Whether they were shop-made or manufactured, they all had a tendency to use dowels, steel pins, or some other type of material that would drag along the outside edges of a workpiece. Recently, while shopping for some shower door replacement parts, I was struck with the perfect idea for an improved center-finding tool.

NYLON WHEELS. At the heart of this design is a pair of inexpensive sliding shower door replacement rollers. The rollers glide smoothly along the edge of a workpiece. After cutting a piece to size for the base, take your time in laying out the hole locations for the screws that secure the rollers, as well as the hole for the handle. The rollers need to be the exact same distance from the center hole in the base. With the parts completed, simply glue the handle in place and attach the rollers with screws, and this tool is ready to put to use.

Gerald Welf
Fridley, MN

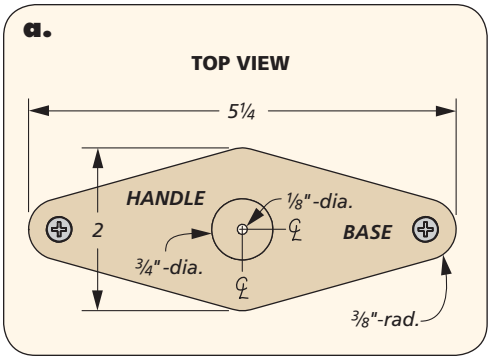

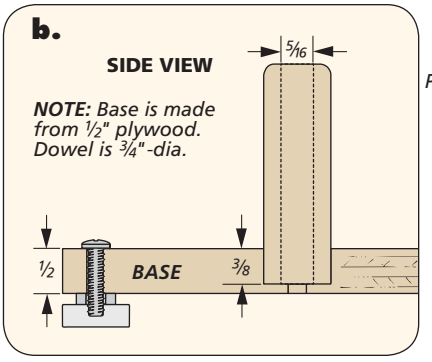

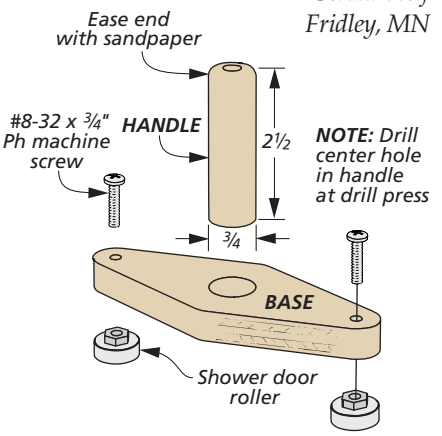

Drill Press Table Gauge

After building a new auxiliary table for my drill press, I wanted to ensure that the table was exactly perpendicular to the drill press spindle. Since I already owned a dial indicator, I came up with the simple jig you see below. This jig allows me to adjust my drill press table to a very precise tolerance.

STRAIGHTFORWARD OPERATION. The jig is nothing more than a piece of stock with the dial indicator attached to one end and a steel rod inserted in the other end. To use the jig, insert the steel rod into the drill chuck and tighten it in place. Adjust the table height so that the indicator needle touches the table surface.

Check the reading on the dial at two positions that are 180° from each other. The table can then be adjusted until the readings are the same. Be sure to check several locations front-to-back and side-to-side to ensure accurate adjustments.

Doug Fleming
Medicine Hat, Alberta

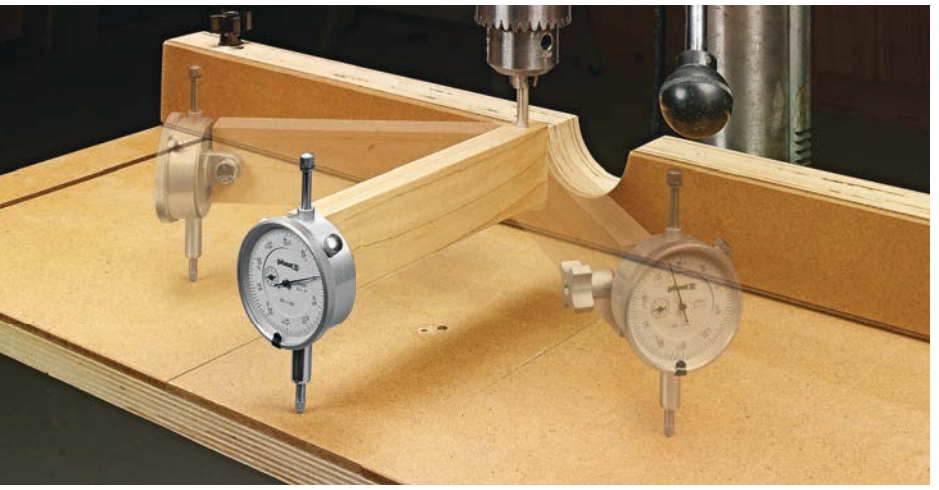

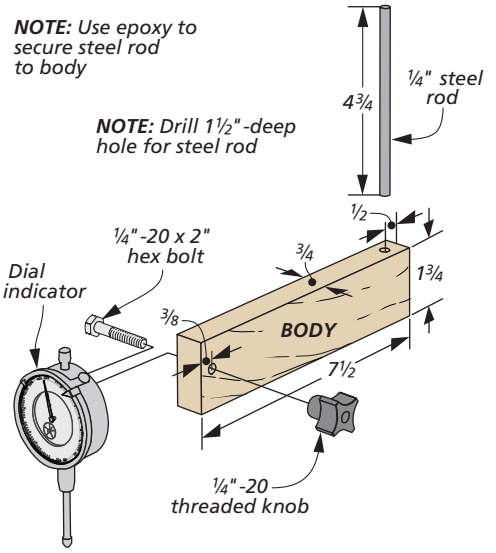

▲ The support brace conveniently folds up alongside the roller stand, allowing the entire unit to be stored together.

Roller Stand Brace

Some shop roller stands tend to fold up easily when using them. This can be especially dangerous if the stand is being used for outfeed support while cutting material at the table saw.

I solved this problem by making a brace out of PVC pipe. The brace slips over one leg of the support stand and snaps down over the other when the stand is open to lock the legs apart. When you want to fold up the stand, the brace folds up, as well (inset photo, above).

SIMPLE DESIGN. Start by measuring the diameter of the legs on the support stand. When you shop for the PVC pipe and fittings, you'll need an inside diameter that fits over the legs. One tee stays intact and slips on one leg. On the other end, I used a "snap tee" that slips over the leg. Snap tees are commonly used in sprinkler irrigation applications and are easy to find in the plumbing section at home improvement stores.

By using a 90° street elbow above the snap tee, the brace can easily be disengaged by slipping your foot underneath the pipe and popping the snap tee off the leg of the roller stand.

Greg Nowlan
Scarborough, Ontario

▲ The support brace is easy to disengage from the stand by popping the snap tee off the leg of the roller stand with your foot.

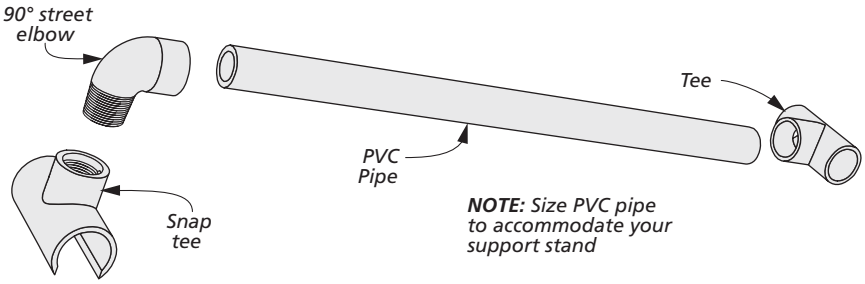

DIGITAL WOODSMITH

SUBMIT TIPS ONLINE

If you have an original shop tip, we would like to hear from you and consider publishing your tip in one or more of our publications. Jump online and go to:

Woodsmith.com
Click on the link,
"SUBMIT A TIP"

You'll be able to tell us all about your tip and upload your photos and drawings. You can also mail your tips to "Woodsmith Tips" at the editorial address shown on page 2. We will pay up to $200 if we publish your tip.

RECEIVE FREE ETIPS by EMAIL

Now you can have the best time-saving secrets, solutions, and techniques sent directly to your email inbox. Just go to:

Woodsmith.com
and click on
"WOODSMITH TIPS"

You'll receive one of our favorite tips each and every week.

all about

working with Bamboo

Over the centuries, bamboo has been used for everything from walls and roofs to cooking and eating utensils. However, until recently, availability was limited to the regions where it grows. Using modern processing methods, bamboo has become more widely available throughout North America in products such as flooring, countertops, and cutting boards. But bamboo is also a great material for woodworking.

BAMBOO CHARACTERISTICS

Bamboo is actually classified as a member of the grass family. Most commercially grown bamboo is a species called *Moso* and is primarily imported from Asia. It has several characteristics similar to those of red oak. (See the box on the opposite page.) Compared to red oak, bamboo is harder but lighter, and has a finer texture. However, a large part of what makes bamboo so desirable as a building material is that it grows extremely fast. Plus, it regrows from the root stock, meaning the plant doesn't die when the bamboo is harvested.

Even though raw bamboo has to be transported from overseas locations, it's often touted as a "green," sustainable material. But to be made into lumber products suitable for furnituremaking and other uses, it requires extensive processing. Bamboo stalks are segmented, hollow tubes with thin walls. They have to be cut into strips and laminated into boards, panels, and veneer using adhesives under high pressure.

VARIETIES. The strips can be glued together edge-to-edge (horizontal grain) or face-to-face (vertical grain) as shown in the upper photos at left. As you can see, horizontal grain exhibits the unique, interesting grain patterns by which bamboo is typically identified.

Carbonized bamboo (lower photos at left) is darkened by the application of heat during processing. This process actually caramelizes the sugars in the fiber.

Bamboo is extremely easy to machine with common woodworking tools, although it tends to splinter some when cutting across the grain. In addition,

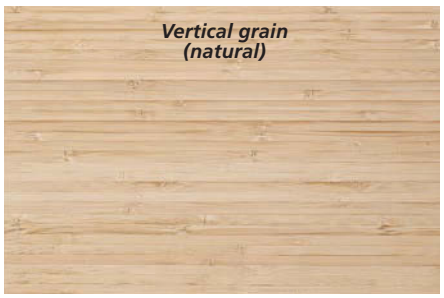

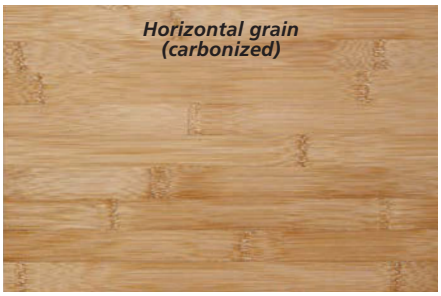

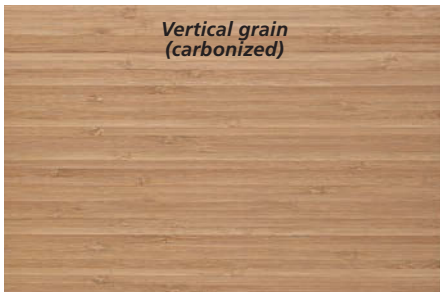

▲ Whether sold in its natural state (upper left photo), or with a darker, "carbonized" look (lower left photo), horizontal-grain bamboo has the characteristic "nodes" most associated with traditional bamboo. Vertical-grain bamboo (right photos) has a more uniform look.

bamboo is naturally moisture resistant. This feature makes it well suited for items like cutting boards and countertops, although a finish is still recommended.

COST. As you might imagine, the extra processing and import expense can drive up the price of bamboo. Large panels can be pricey, and the cost of dimensional bamboo lumber is almost one and a half times the cost of red oak. One supplier I contacted listed a ¾" x 8" - 97" board for $34.50, or $6.40 a board foot.

Additionally, most lumber dealers don't carry bamboo products apart from flooring. So you may have to order it from one of the sources listed on page 67.

Using a secondary wood for less visible areas of a project is a good way to use bamboo without spending too much.

DESIGNING WITH BAMBOO

Few woods are as readily identified with Asian furniture styles as bamboo. Almost any project that uses bamboo takes on an Asian flair. The wide variety of bamboo products available (photos at right) gives you the option to use bamboo for almost any project part.

SELECTIVE USE IN DESIGN. The good news is that not every part of the project has to be made from bamboo to take advantage of the look. For example, you can save money with the use of a secondary wood, as shown in the photo at left. Here, a less expensive wood (maple) is used for the drawer sides. Similar savings would be gained by using bamboo for the visible parts of a project but constructing the case from a secondary wood.

Another option is to use readily available hardwoods throughout a project and apply bamboo veneer to a few select parts. Bamboo veneer is available in 4' x 8' sheets in thicknesses from 0.6mm and up.

Often a small but prominent detail is enough to convey the style you want. Drawer knobs, door handles, legs, trim, and even inlays can be made from bamboo to create unique features.

The end grain of bamboo can be quite noticeable, especially on big panels (photos at right). This look may be desirable on some projects, but it's also easy to hide in areas where it looks too "busy." Bamboo veneer edging is available for this purpose.

Bamboo is sold in a wide variety of sizes making it easy to customize for specific project applications.

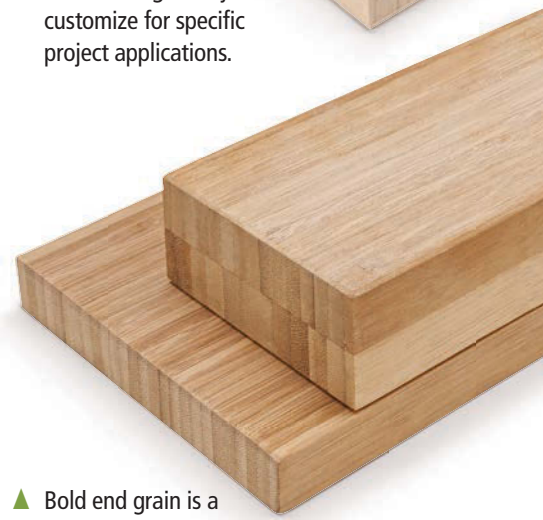

Bold end grain is a prominent feature of bamboo. It can be showcased or covered with veneer edge-tape depending on the application.

Bamboo may not be right for every project. But if you're in the market to try something new, it offers a unique appearance that can look great on the right piece of furniture. W

Working Characteristics: BAMBOO vs. RED OAK

Red oak has long been the go-to hardwood for furniture building, flooring, and a myriad of other uses in the United States. But the recent surge in popularity of bamboo has allowed it to gain a foothold in the marketplace. As the chart at right shows, many of the attributes that have long made oak a favorite among craftsmen and consumers is equaled (and in some cases, surpassed) by bamboo.

Taking into consideration the fact that bamboo can be harvested in as little as seven years without harming the plant, bamboo almost seems too good to be true. But, like any product, bamboo has its downsides.

BAMBOO DRAWBACKS. Lower grades of bamboo may be susceptible to dents and scratches. Also, potentially toxic chemicals can be added during the processing phase of bamboo imported from some countries. So the reliability of the manufacturer should be a consideration when selecting a product. And with its contemporary look, bamboo may be difficult to fit into a vintage décor scheme.

Bamboo Compared to Red Oak:

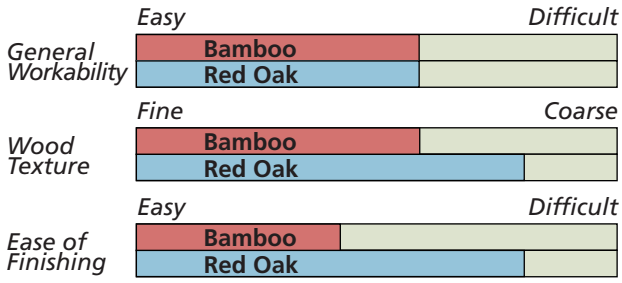

Bamboo by the Numbers:

18.44% Lighter	27.91% Harder	3.13% Less Dense
Bamboo *2.92 lbs./board foot*	**Bamboo** *1650 lbs-force*	**Bamboo** *0.62*
Red Oak *3.58 lbs./board foot*	**Red Oak** *1290 lbs-force*	**Red Oak** *0.64*
		(Specific Gravity)

Source: woodworkerssource.com/Bamboo.html

best bits for Routing Mortises

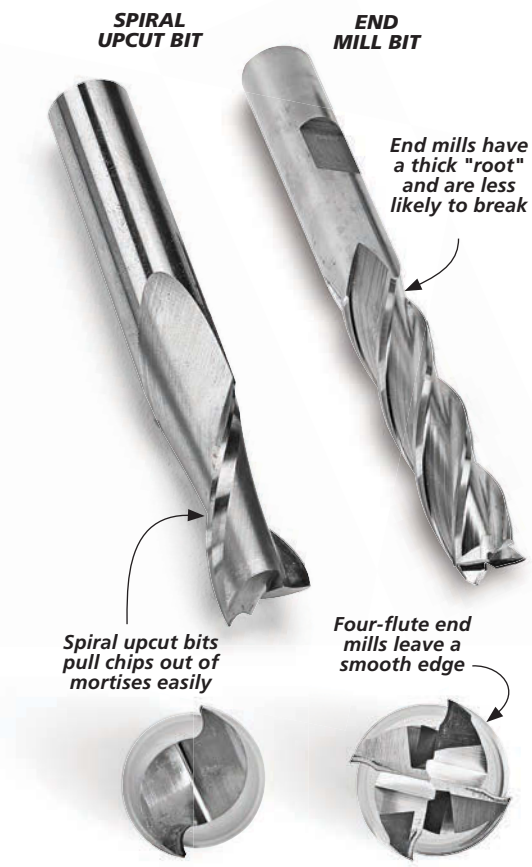

If cutting smooth profiles is the main reason many woodworkers own a router, cutting accurate joints should be a close second. More specifically, one joinery technique where a router really shines is cutting mortises. A router leaves smooth walls that create a solid glue joint.

A simple approach for routing mortises is to use a plunge router, an edge guide, and a spiral upcut bit. The cutting flutes of spiral bits work like a drill bit to pull chips up and out of a mortise. They do a good job, but these solid carbide bits can be pretty expensive. Plus, you're limited to a few diameters and cutting lengths.

Recently, I've been working with a different type of bit that works just as well and costs much less than a typical spiral bit — a high speed steel spiral end mill (left). The reason you may not be familiar with this bit is that they're usually used in milling machines for cutting and shaping metal. However, some of the features that make them ideal for creating smooth metal surfaces make them good candidates for routing mortises in wood.

END MILL BENEFITS. End mills come in a range of configurations. For woodworking, I've found that an end mill with four flutes gives the best results. The extra flutes leave a smooth surface.

End mills are typically longer than spiral bits. So this means you can create deeper (and stronger) mortises. They also add stability to keep the bit from wobbling in the cut. In the lower photo, you can see how an end mill has a much thicker "root" than a two-flute spiral bit, which makes for a stronger bit.

CHOOSING END MILLS. The terminology for end mills can be somewhat confusing. But there are key features to look for. You want a standard end mill with four flutes. It should be listed as a center-cutting, single end mill with a plain shank and a 30° helix. To make finding the bits easier, I've listed the bits shown here in sources on page 67.

There's one exception to this rule, and that's for creating larger mortises. To make a ½"-wide mortise, an end mill like I just described can be a little aggressive. The solution is to use a "roughing/finishing" bit, as shown in the upper right photo on the facing page. Instead of smooth cutting edges, the flutes are serrated to break up wood fibers. As a result, the cutting action is a lot less grabby.

Some end mills have a flat spot on the shank that's used with milling machines. In a router be sure the collet has a firm grip all around the shank.

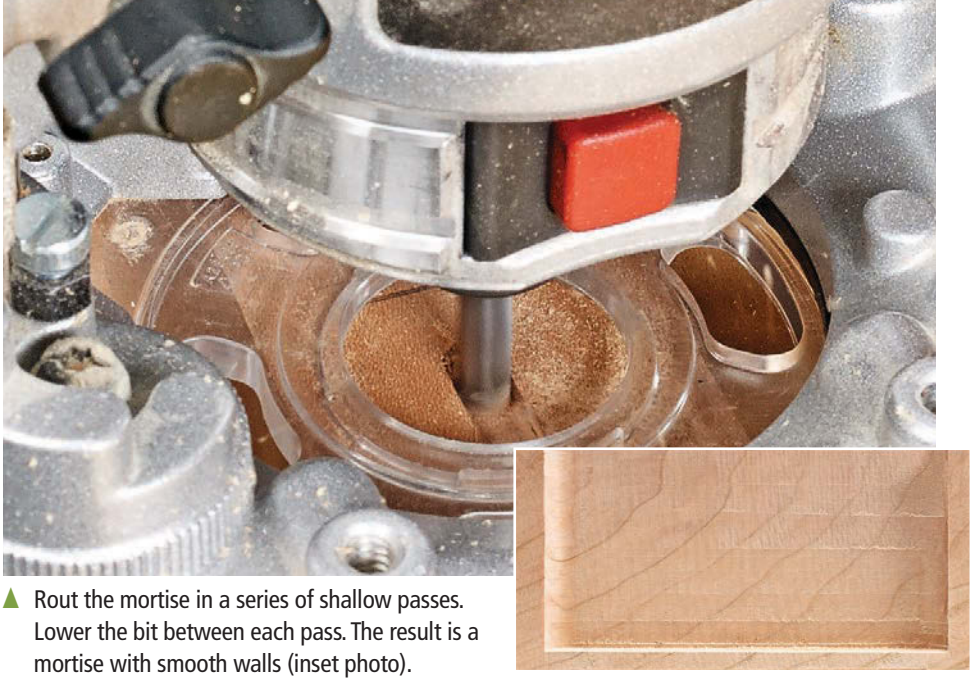

▲ Rout the mortise in a series of shallow passes. Lower the bit between each pass. The result is a mortise with smooth walls (inset photo).

WORKING WITH END MILLS. If you've ever cut mortises with a router, then using an end mill will be a pretty familiar experience. Even so, it pays to run through a few pointers. And if you've never routed mortises, this is a good place to start.

Since mortises are deep cuts, you can't rout one in a single pass. It's just too much material to remove. Instead, you want to nibble away at the mortise in a series of progressively deeper cuts, as you can see in the photo above.

How deep of a cut you can take depends on the material. Dense wood requires a shallower cut than softer wood species. With this in mind, I like to set the router to take a 1/8"-deep cut on the first pass.

USE YOUR SENSES. Listen to the router and notice the condition of the cut to help you gauge your progress. The router shouldn't sound strained. And the cut should go smoothly without burning, although some burning at the ends of the mortise is normal. If all goes well, you can set up to take a deeper cut (1/4") for subsequent passes.

The bits do a pretty good job of pulling chips out of the cut. But on a deep mortise, you may need to vacuum out the debris to limit heat buildup and bit strain.

For larger diameter bits (3/8" and 1/2"), I've found that slowing down the router (if your router is equipped with variable speed) helps it cut more evenly. On my router, that meant slowing down to 16,000 RPM (the halfway setting on the dial). Remember, end mills were originally designed for cutting metal at slower speeds. So a slower router setting will help it clear wood chips more easily.

WHICH BITS TO GET. Speaking of bit sizes, you have several options, as shown in the upper right photo. It all comes down to the type of work you do — or would like to do. I suggest starting with a 1/4"-dia. bit. This is a common size for many furniture-making tasks. The second bit to get is a 1/2" roughing/finishing bit. This bit creates a heavy-duty joint in larger workpieces.

From there, you can pick out some in-between sizes like 5/16" and 3/8" bits. These give you flexibility to match the mortise to the size of the workpiece. A good rule of thumb is that the mortise should be about one third the thickness of the workpiece. Be aware that these two bits require some additional hardware for your router. Take a look at the box below for details.

You can depend on your router to create accurate, smooth mortises. End mill bits offer you a way to get those results without spending a lot of money. W

How-To: MAKE THE BIT FIT

Most routers come with either a 1/4" collet, a 1/2" collet, or both. Since the shank of an end mill bit matches its cutting diameter, you'll need some help to accommodate 5/16" and 3/8" bits. Thankfully, you have a couple of solutions.

SLEEVES. If your router has a 1/2" collet, you can get adapter sleeves that fit inside the collet and accept bits with smaller shanks. You can find sleeves for both 3/8" and 5/16" bits. The 5/16" sleeves are often referred to as 8mm sleeves since the two sizes are interchangeable.

COLLET. The other option is to get a different collet. *Porter Cable*, *Bosch*, and other router manufacterers offer accessory collets for 3/8" router bits or 8mm (5/16") bits. In general, a collet offers a more secure hold and less vibration than a sleeve.

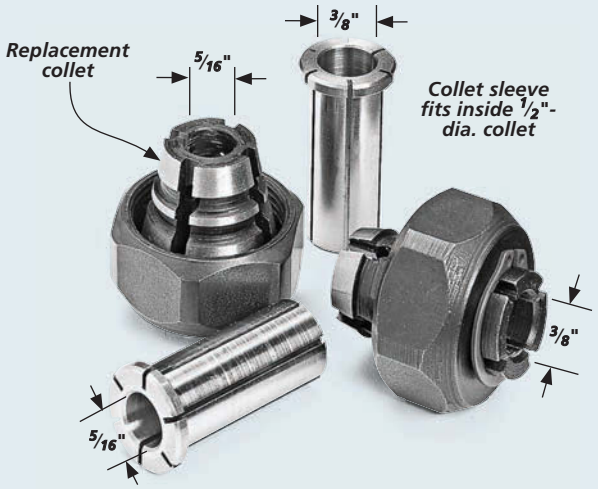

creating a

Custom Bench Plane

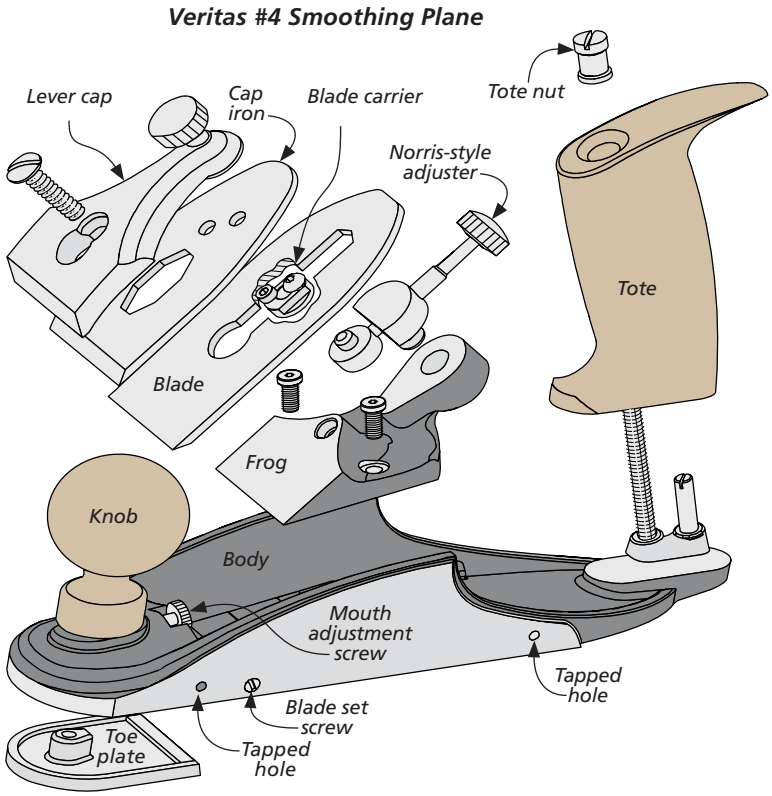

In the fall of 2014, *Lee Valley* introduced a line of *Veritas* custom bench planes with the claim that they could be made in over 9,000 different combinations. As you can see in the photo above, the styling is sort of a blend of modern and retro looks. But I was more curious about how these planes can be customized and, more important, how they perform on the workbench.

TRADITIONAL SIZES. You can order a plane in the following sizes based on the conventional *Stanley/Bailey* bench plane numbering system: 4, 4½, 5, 5½, and 7. Prices range from around $270 to $380. Once you choose the size of plane you want, you have a number of choices to make to design your custom plane.

FROG ANGLES. The cutting angle of the plane blade is one of the most important considerations to make. And the frog of the plane dictates this angle. A frog is simply the bed where the blade rests. It's shown in the illustration at left. Lower frog angles are great for trimming end grain. Higher angles can

help you get a smooth finish without tearout on figured woods, as shown in the photo on the opposite page. I had no tearout issues while smoothing the face of a curly maple workpiece. I used a 55° frog and adjusted the mouth of the plane for a thin shaving. (I'll talk more about the mouth adjustment later.)

Lee Valley supplies three standard frog angles of 40°, 45°, and 55°, as shown below. A 45° angle is what you'll find on most bench planes and makes it more of an all-purpose tool.

One unique aspect of the planes is you can order a custom frog in ½° increments from 40° to 65° for only a $10 surcharge. They're also available separately. The frogs are interchangeable, so I can see having a few different ones on hand for various planing tasks. As you'll notice in the drawing on the opposite page, the frog is held in place with just a pair of cap screws, so it's easy to remove and replace.

TOTE OPTIONS. The next choice to make is the size and style of tote you prefer (upper right photos). The totes are available in two styles and three sizes. The traditional-style tote is for those who are comfortable with the style found on older hand planes. The *Veritas* style is a little more upright to allow your forearm to be more parallel with the direction of the planing stroke. I've used both, and the *Veritas* style does take a little getting used to if you've been using traditional planes for a while.

The designers at *Veritas* did their homework to come up with the three sizes of totes. They designed a device that measures a hand across the knuckles. They placed this device in their retail stores in Canada and had customers measure their hands. Then the customer was asked to try different sizes and styles of totes. Their feedback was recorded and analyzed to come up with the final design.

When you order a tote for your plane, you'll need to measure your hand. The distance across the palm at the knuckles determines the size of tote that fits best.

KNOB CHOICES. The knobs are available in the three styles shown above. The choice comes down to what's comfortable for you and what type of grip you typically use when planing. *Lee Valley* recommends the wide knob for larger, heavier planes to make it easier to lift the front of the plane on the return stroke. For a No. 4 plane, I prefer the standard knob.

▲ You can customize the feel of a hand plane by choosing a traditional-style tote or a *Veritas* tote. Totes are available in small, medium, and large sizes for a custom fit. Your choice of knob boils down to personal preference and how you grip your plane during use.

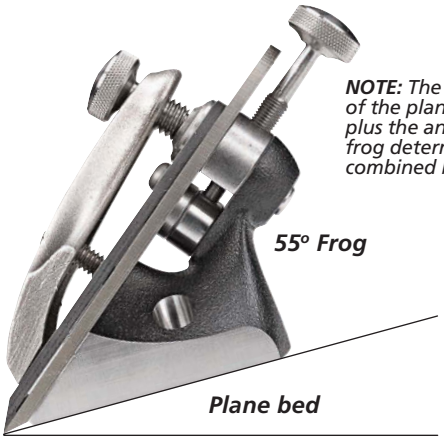

▲ A high-angle frog positions the blade to provide more of a scraping action for smoothing figured grains.

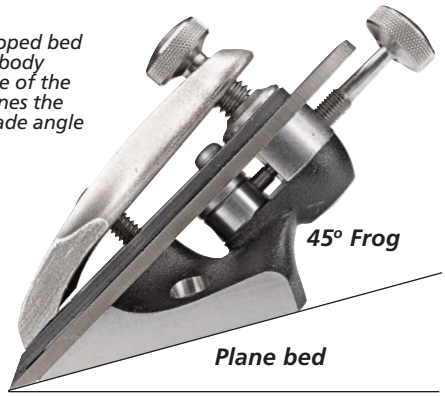

▲ On most traditional and antique hand planes, you'll find a 45° bed angle that's suitable for general planing tasks.

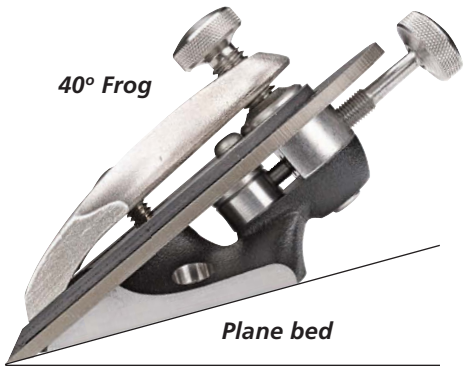

▲ A low-angle frog places the blade at an angle that slices through end grain more easily for a smooth surface.

Completing the Final Details

After you've chosen the size of plane, tote, and knob, the next decision to make for your plane is the type of steel used for the blade. Your choices of blade material are O1 oil-hardened carbon steel or *PM-V11*, a powdered metal alloy that *Veritas* uses in a lot of its cutting tools. I like O1 steel because it's easy to sharpen to a fine edge and it costs a little less. But I've recently become a fan of *PM-V11*. It holds an edge much longer, in my experience. Plus, sharpening and honing *PM-V11* is relatively easy with diamond stones.

SETTING UP & USING YOUR PLANE

As I mentioned earlier, the blade ultimately rests on the frog of the plane. The upper left photo shows how the frog is installed with two screws. *Veritas* recommends loosely installing one of the screws then sliding the toe plate back to help align the frog parallel with the mouth before tightening the screws.

ADJUSTER. Once the frog is installed, the adjuster mechanism snaps into the frog, as shown in the upper right photo. This two-in-one (or Norris-style) adjuster allows you to adjust the depth of the blade by turning the knob at the top. Simply nudging the knob side-to-side pivots the blade to adjust the cutting edge parallel to the sole of the plane.

A minor complaint I've had with older *Veritas* planes is that the adjustment mechanism for the blade depth was too coarse. In other words, barely turning the knob would extend the blade further than I wanted. For this new line of planes, *Veritas* researched several different thread pitches to arrive at a good compromise between a fast or slow blade depth adjustment. A slow adjuster mechanism with finer threads is available separately.

▲ The frog is held in place with a pair of cap screws. The toe plate is used to align the frog during installation.

▲ The bottom pin on the adjuster mechanism snaps into the frog and is held secure by an internal retaining spring.

▲ The blade carrier nestles in the blade slot (top inset) and is secured to the blade with a single screw. The cap iron is attached to the blade carrier with a pan head screw. Adjusting the position of the carrier on the blade can be done with the cap iron installed (bottom inset).

This makes precise depth adjustments easier when turning the knob.

BLADE ATTACHMENT. Next comes the blade and cap iron assembly. *Veritas* uses an unusual method of connecting the cap iron to the blade and then registering the blade on the adjustment mechanism. This "blade carrier" is illustrated in the drawing on page 14 and shown in the inset photos above. It's a ring-shaped piece that locks into the slot in the blade with a small cap screw. The cap iron is then held tight to the blade carrier with a single panhead screw.

One nice benefit about this arrangement is that when you remove the blade for honing, the blade carrier automatically registers the blade in the same position when it's reinstalled back onto the frog. This makes getting back to work a quicker task without having to fuss with major blade adjustments.

CAP IRON. *Veritas* uses A2 tool steel for the cap iron because it doesn't warp or twist during heat treatment. Like the blade, it's lapped flat. This guarantees a seamless fit with the blade.

To install the blade, the center hole in the blade carrier fits over a pin on the adjuster. Then center the blade side-to-side by adjusting a set screw on either side of the plane body, as in the lower left photo. Once you do this, there's no need to fuss with the screws after that.

The final steps in assembly are installing the screw for the lever cap into the frog and adding the lever cap. The lever cap's keyhole-shaped opening drops

▲ A set screw on each side of the plane allows you to center the blade in the mouth opening. You typically only make this adjustment once.

over the head of the screw and slides into place. Then you lightly tighten the lever cap over the blade and cap iron assembly. You'll want just enough pressure to hold the blade's position and still allow easy adjustment. It doesn't take much pressure to hold the assembly secure.

ADJUSTABLE MOUTH. If you take a look at the photos on the right, you'll see how the toe plate on the bottom of the plane slides to create a wide or narrow mouth opening. When removing a heavy shaving, it helps to open up the mouth. But when it comes time for smoothing a surface and producing thin shavings, I like to set the mouth pretty tight. This helps prevent tearout as the blade slices through the wood.

To adjust the mouth opening, simply loosen the knob and slide it forward or backward. The knob is attached to the toe plate with a stud through a slotted hole in the plane body. A knurled adjustment screw right behind the knob allows you to set the width of the mouth opening. You can see this screw being adjusted in the far right photo. This screw also serves as a stop to prevent you from accidentally damaging the blade by sliding the toe plate back too far.

You'll back this screw out when installing a frog to allow the back edge of the toe plate to contact the front edge of the frog. This aligns the frog before you tighten the screws used to secure it. Slide the toe plate all the way forward to install the blade assembly and lever cap. Then adjust the stop screw to set the desired mouth opening.

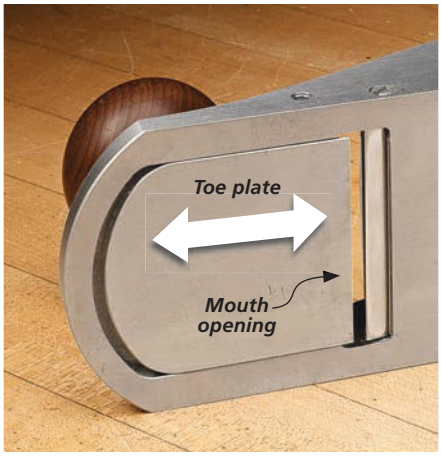

▲ The planes feature an adjustable mouth. Loosening the knob allows the toe plate to slide, closing or opening the mouth.

▲ An adjustment screw serves as a stop to prevent the toe plate from damaging the blade when adjusting the mouth opening.

IMPRESSIONS. *Veritas* hand planes have had some of these features for a lot of years. But combining them with the new features that you can customize to your liking is pretty significant.

But what matters more to me is how the plane performs. After a light honing, I gave the No. 4 plane a thorough workout on a variety of hardwoods. The 40° low-angle frog sliced through end grain easily without requiring a lot of muscle.

The 55° high-angle frog made quick work of smoothing curly maple. With a sharp blade and tight mouth opening, it removed the tearout that occurred while running it through a thickness planer.

The 45° frog performed well in a variety of general planing tasks. I had no complaints about its performance.

If you're happy with your current plane, there may not be a compelling reason to upgrade to a *Veritas* custom plane. But if you're looking for an heirloom-quality investment that you can use right out of the box — and for decades to come — you won't be disappointed. These new planes are solid performers. W

Accessories: PLANE FENCE

Each side of a new *Veritas* custom plane is drilled and tapped with a pair of holes that can be used for attaching accessories.

Currently, the only accessory available is a fence. It comes with two steel rods that thread into the side of the plane. The fence is positioned and locks onto the rods with knobs that act much like the collet on your router.

Here, I'm using the fence to bevel the edges of a panel. To set the desired angle, I've attached a beveled auxiliary fence. It guides the plane along the edge of the workpiece.

Veritas has hinted that there may be more accessories to come. One possibility is a knob for using the plane with a shooting board.

► An accessory like a fence turns your plane into a multipurpose tool. Use the fence to square the edge of a workpiece or create a beveled edge.

tips & tricks for installing Drawer Slides

Building drawers that slide smoothly while holding a lot of weight is a tall order for traditional wood drawer guides. Over time, wood components wear down, and seasonal humidity changes can cause drawers to stick. In addition, wood drawer guides don't give you complete access to the contents of the drawer.

The solution to these challenges is to use side-mount, full-extension drawer slides. While they aren't appropriate for a period furniture reproduction, I do use them on many shop and furniture projects where reliable operation is a must.

TWO PARTS. On the surface, metal drawer slides seem as if they'd be a hassle to install accurately. The key to simplifying the process lies in the fact that the slide separates into two components. The smaller part gets attached to the drawer box, and the larger piece mounts to the case (more on this part later).

BETTER SCREWS. Before going any further, I want to take a moment to talk about the screws. Many slides come with screws. But if they're ordinary roundhead screws, I toss them and order screws that are designed for installing slides, as shown in the lower left photo (for sources, turn to page 67). The washerhead screws have a low profile. A large bearing surface and deep threads ensure a strong grip.

THE RIGHT LOCATION. One of the benefits of using full-extension slides is you have a lot of freedom in locating the hardware on the drawer sides. The truth is, unless they're special-purpose slides, you can attach them almost anywhere you like on the drawer box.

That being said, I have two primary locations for the slides. These are shown in the drawings below.

Probably the most common location is to center the slides on the width of the drawer sides, as shown in the left drawing. The other location is flush with the bottom of the drawer box, as in the photo above and the lower right drawing.

These special screws have a wide, low-profile head, and the deep threads can be started without a pilot hole.

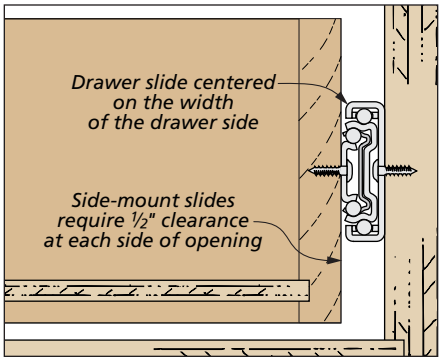

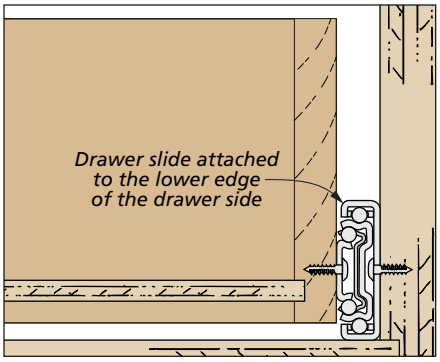

▲ Cut a spacer to support the drawer slide in the correct position. Rest the drawer slide on the spacer and install the screws.

▲ Measure and mark the location of the next pair of slides on the case. Then cut the spacer to match.

▲ Clamp the spacer in place and continue the installation process. Repeat the steps until all the slides have been installed.

When attaching the slides to the drawer box, it's a good idea to drive screws through the vertically slotted holes first (far right drawing). This gives you room to adjust the position up and down for the best performance and look.

CABINET COMPONENT. Attaching the slides to the drawer boxes is pretty straightforward. Installing the other half of the hardware is a little more involved. That's because you're working inside a cabinet where things may be a little cramped and dark. In addition, you need to make sure each pair of slides are installed consistently side to side.

The method I turn to for this task is highlighted in the three photos above. The secret is an MDF spacer. This supports the slide and guarantees that each part is aligned. Then it's just a matter of starting at the top and working your way down. This way, previously installed slides won't get in your way. And you can just cut the spacer down to line up the next pair. Here again, use the slotted holes (running side to side). This will allow you to fine-tune the front-to-back position of the drawer in its opening.

Completing the installation process means you're ready to put the drawer into place and fit the two components back together. Carefully line up each part and slide the drawer box in. You'll feel a little resistance here. Don't be surprised. That's just the way the parts reengage.

Once the drawer is installed, it should operate easily. If it doesn't, take a look at the box below for two remedies.

DON'T STOP NOW. Once both parts of the slide are installed and you're satisfied with the fit and movement, there's one last step that's easy to overlook. That's to add screws to the round, fixed holes in both components of the slides. It may seem like overkill, but without these screws, the slide mechanism will likely creep out of alignment over time.

If you pay attention to these few details, you're guaranteed to get the best performance from full-extension slides. The result is drawers that you can rely on to carry a heavy load and operate smoothly year after year. W

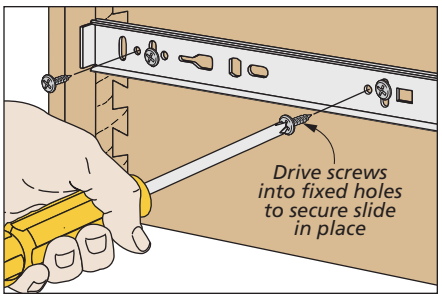

▲ Complete the installation process by driving screws into the fixed holes in both the drawer (shown) and case components.

How-To: FITTING THE DRAWERS

After taking the steps shown here, you may find that a drawer isn't opening and closing as smoothly and effortlessly as possible. The problem may just be the size of the drawers. Carefully measure the drawer opening, the drawer box, and the thickness of the drawer slides. Drawer slides have enough play to tolerate a slight variation in the size of the drawer. But if the drawer is too large or too small, that can stress the mechanism.

TOO SMALL. If you find the drawer box is too narrow, shim one or both sides of the cabinet portion of the slides. You can use card stock, brass shims, or even washers. Don't feel you need to shim both sides evenly. The small amount of shimming isn't noticeable.

TOO WIDE. The solution for a wide drawer is to trim the drawer to tweak the fit. You can do that simply by jointing the side.

Or you could cut a shallow groove or rabbet sized to fit the drawer slide. The setup is the same as cutting a rabbet by burying a dado blade in an auxiliary fence (or cutting a wide groove if the slides are centered.) Trim one or both sides of the drawer until you get a smooth-sliding fit.

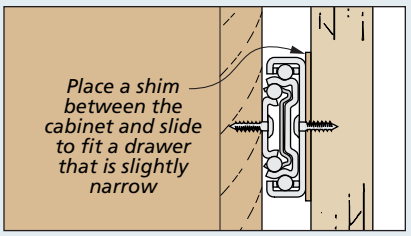

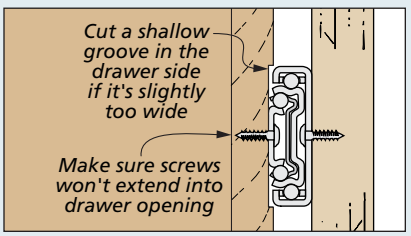

Shop Project

Scissor-Lift Workbench

With this multi-use, compact workbench, you can raise any project to a comfortable working height easily and safely.

For years I've had a scissor-lift cart in my workshop. I've primarily used it for loading and unloading heavy items from my truck. It wasn't until recently that I decided to take my cart to the next level and make it even more useful by adding the auxiliary top you see above.

The mechanical advantage provided by the hydraulic cylinder is incredibly convenient. But by adding the additional workbench (complete with vise, tool tray, and magnetic tool holder) it's easy to turn a one dimensional cart into a must-have, multi-use workhorse. The hollow-body design and dust port allow it to also function as a downdraft sanding table.

Best of all, building this workbench won't take you more than a couple of pleasant days in the shop. Turn the page to get started on this *Swiss Army* knife of shop accessories.

Construction Overview / OVERALL DIMENSIONS: 42¼"W x 14½"H (35" Max.) x 21½"D

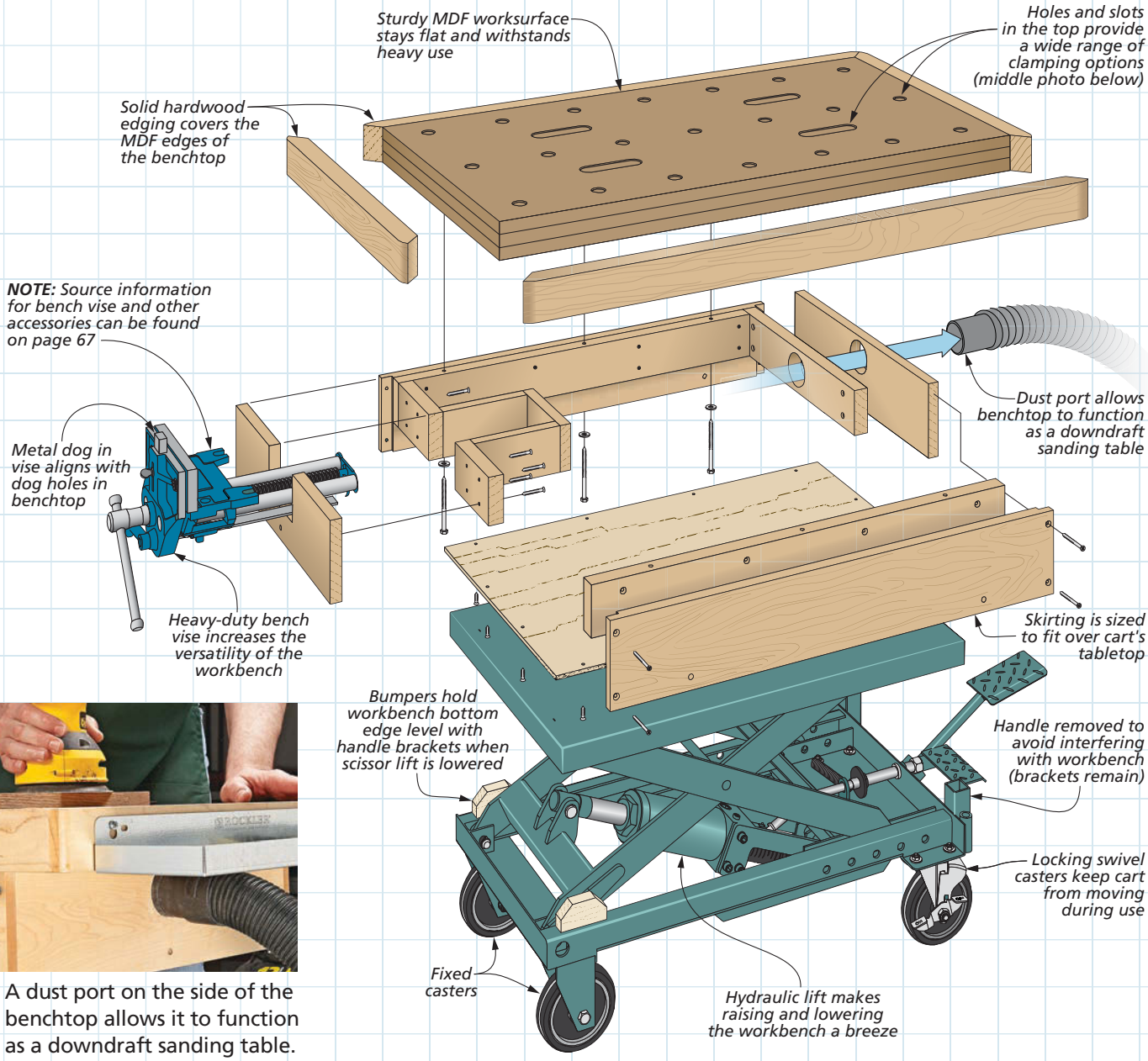

A dust port on the side of the benchtop allows it to function as a downdraft sanding table.

A magnetic tool holder along the edge of the workbench provides easy access to tools.

Holes and slots in the benchtop allow you to conveniently clamp a workpiece in place.

A wire mesh auxiliary tray keeps often-used items close at hand without collecting sawdust.

Building the **BENCHTOP**

The heart of the scissor-lift workbench is the heavy-duty benchtop. I wanted it to be strong enough to withstand the repeated use of raising and lowering heavy loads — the hydraulic scissor lift's intended purpose. But I also wanted to give it some added functionality. So I drilled dog holes and long slots in the surface to provide multiple, convenient clamping options.

To ensure I had a rock-solid top, I glued three layers of MDF together. The fragile edges of the MDF are protected by some thick, hardwood strips. The skirting underneath the table forms the hollow base of the workbench. It provides a place to mount a vise to the underside of the top, as well as allowing for a dust port in one end.

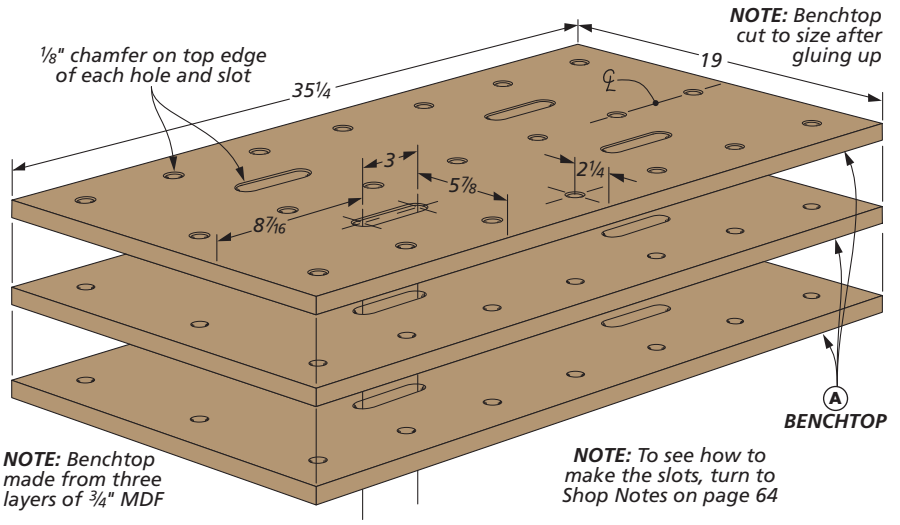

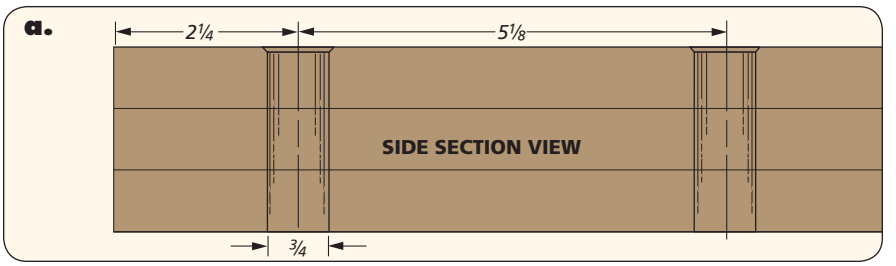

FIRST THINGS FIRST. Before you can start making sawdust, you need to have a hydraulic-lift table at the ready. The information for where I purchased my lift can be found in Sources on page 67. But really, there are several good options available. Just be sure to buy a model that has an easily removable handle. You'll also need to adjust dimensions accordingly if you choose a different model than the one shown on page 20. If you'll be adding a vise to the project, you'll want to have that on hand, also.

BENCHTOP BASICS. As I mentioned before, the benchtop is constructed from three layers of MDF as shown above. Start by cutting these pieces a little oversize and gluing them together. I then cut the entire assembly to final size after the glue dried.

BENCH DOG HOLES. Any workbench surface that may be used for woodworking isn't complete without the addition of bench dog holes. They increase the functionality of the workbench by providing a place to insert bench dogs and add clamps.

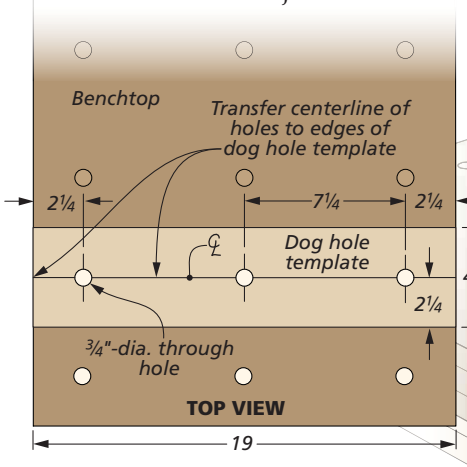

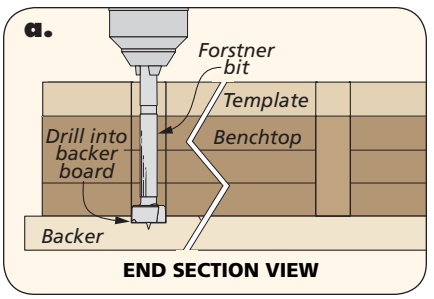

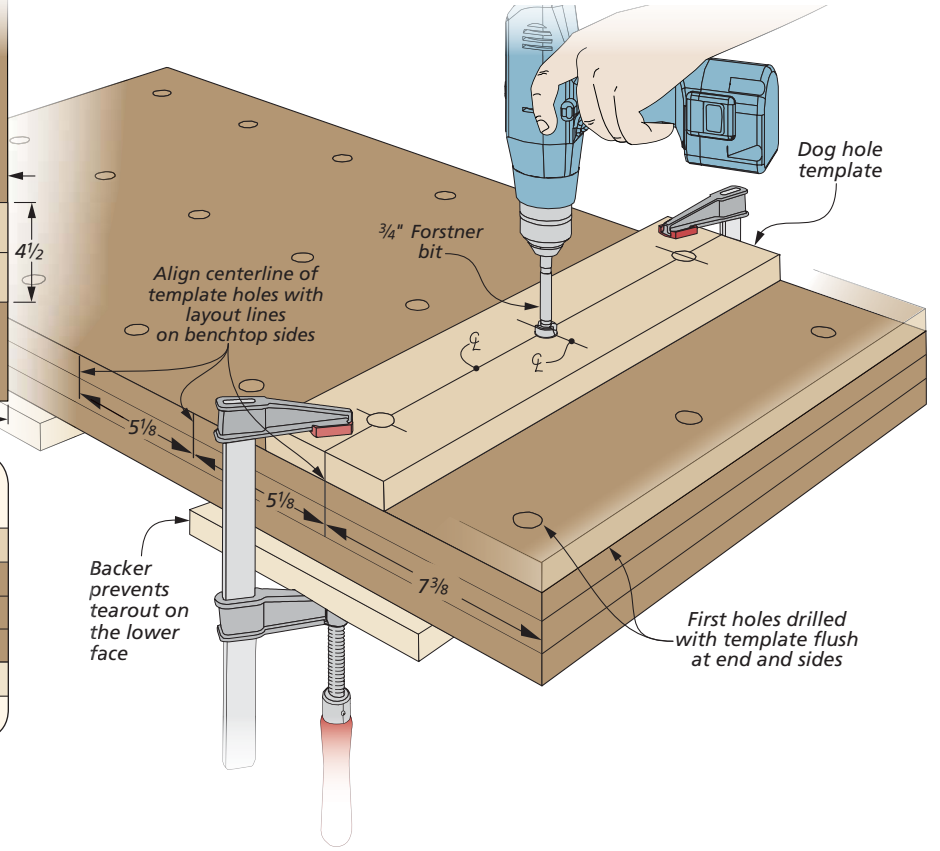

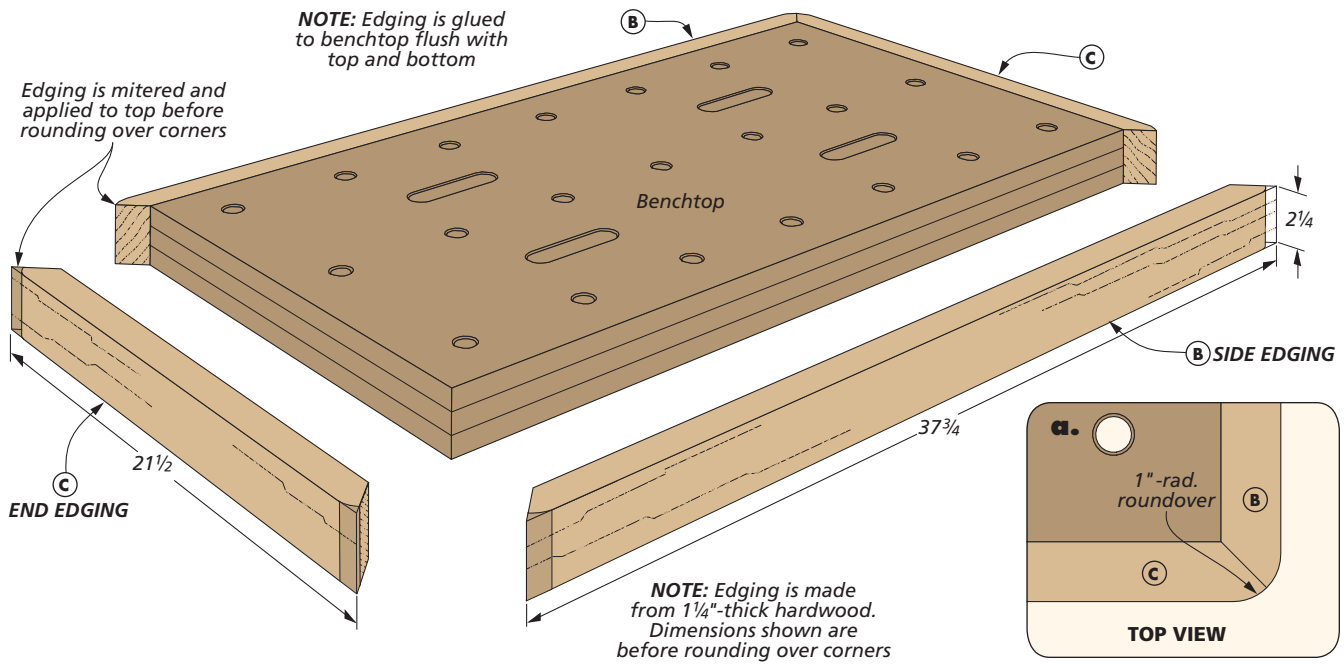

DOWNDRAFT BONUS. The bench dog holes also serve another purpose. They allow the top to double as a downdraft sanding table when a hose is attached to the dust port in the skirting.

Drilling the holes in the benchtop isn't difficult. But because of the size (and weight) of the top, I found it much easier to drill the holes with a hand drill rather than taking the top to the drill press.

To keep the bench dog holes evenly spaced during drilling, I made the simple template shown at the bottom of the opposite page. Align the template edges with the benchtop edges and clamp it in place. Be sure to have a backer board in place under the assembly to prevent tearout. After drilling the holes, add a chamfer to the top edge of each hole to reduce chipping.

CLAMPING SLOTS. To make the four slots in the benchtop, I used another template and a three-step process. Shop Notes on page 64 explains how to make this template and walks you through the process of creating the slots.

BENCHTOP EDGING. With the holes and slots completed, I added the hardwood edging to the top, as shown above. Cut these pieces a little long, miter the corners, and attach them to the top using glue and clamps. I also rounded the corners of the edging (detail 'a') using a coarse file and sandpaper.

SKIRTS. The boards that make up the skirting create an opening that is sized to fit over the tabletop of the cart. Cut the side skirts to size first, and then form the rabbets on each end using a dado stack at the table saw. The end skirts can then be cut to length to fit between the sides.

The vacuum end skirt has a hole drilled near the center to accept a hose. The vise end skirt is notched to provide clearance for the vise rods. I made this notch at the band saw. With the parts made, use a little glue and screws to assemble the four pieces. But hold off on attaching them to the underside of the benchtop. You'll do that later.

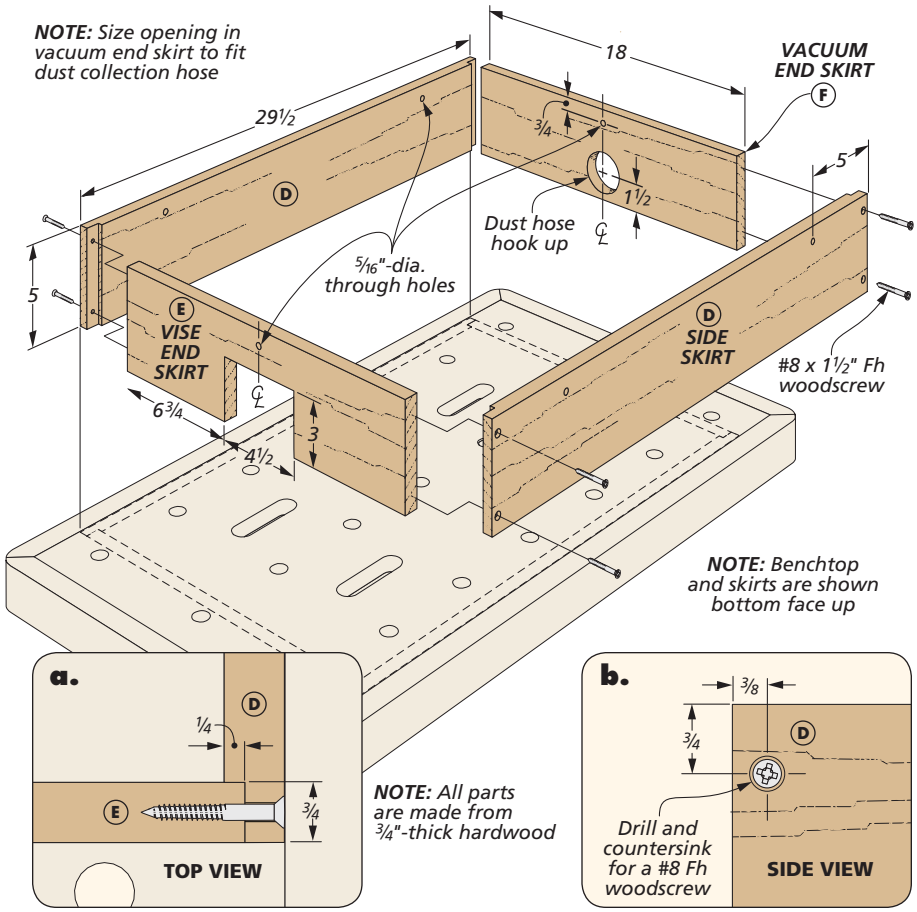

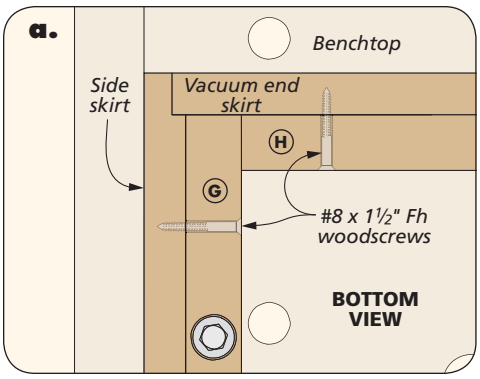

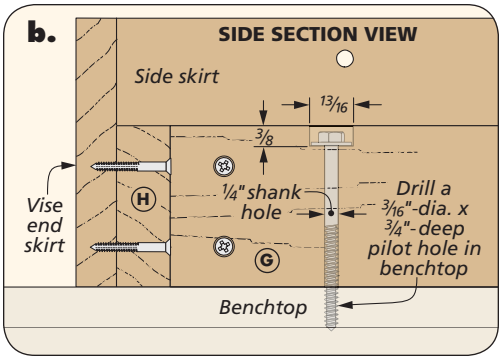

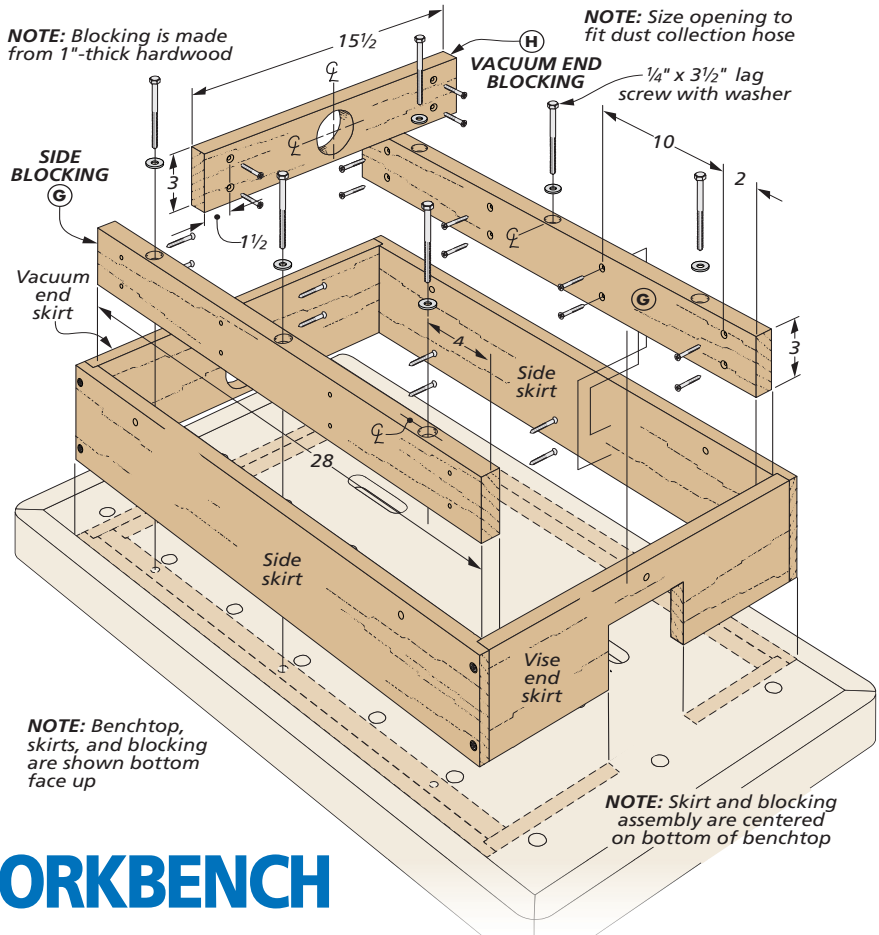

Completing the WORKBENCH

With the benchtop and skirting assemblies complete, there are just a few more details to wrap up on this project. Some hardwood blocking is attached inside the skirting. This blocking performs two functions. First, it provides a place to drive long lag screws through to attach the skirting to the benchtop. And second, some short pieces of blocking are used to seal off the bench vise from the dust chamber. This provides better airflow through the dust port. After that, a thin panel is screwed to the blocking to completely seal off the dust cavity.

STRUCTURAL BLOCKING. Start by cutting the three pieces to size for the side blocking and the vacuum end blocking. Use the hole in the vacuum end skirt to mark the location of the hole on the vacuum end block and drill this hole.

The two side blocks need three counterbored through holes drilled on the edge. These holes allow for the use of lag screws and washers to attach the blocking and skirting to the benchtop.

With these holes drilled, I attached the three blocking pieces to the skirting

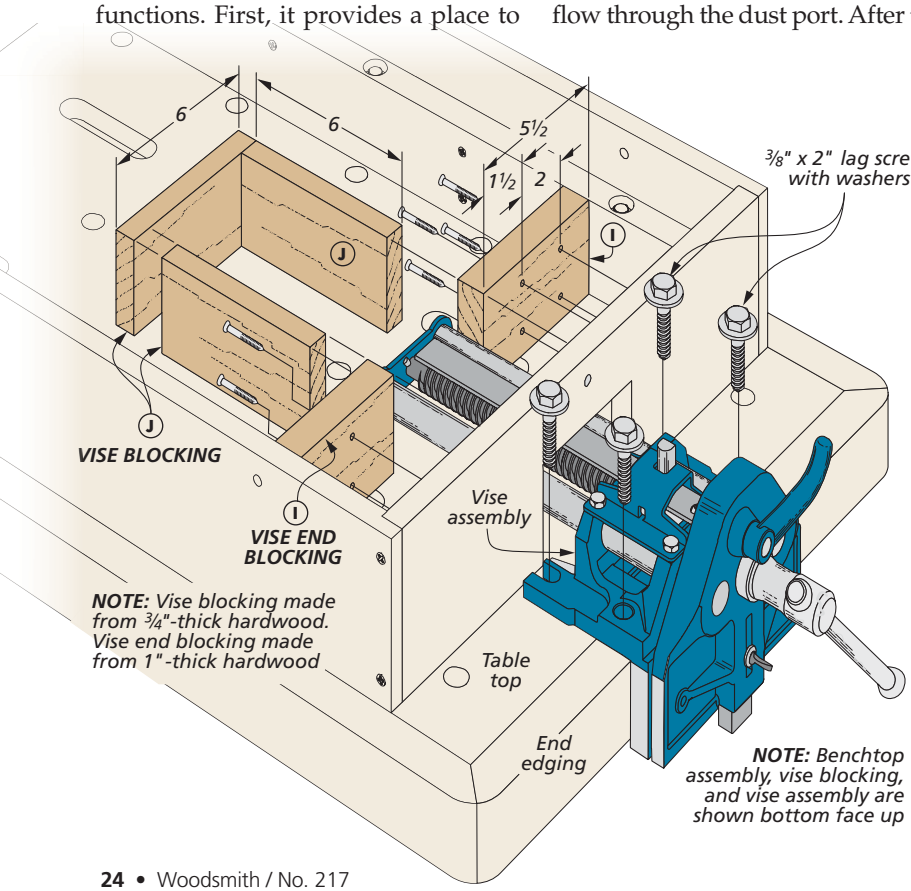

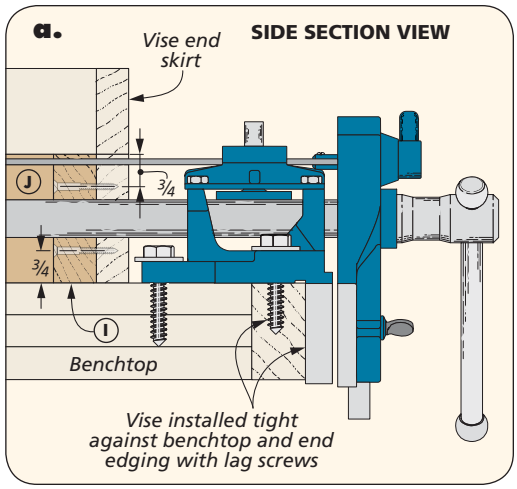

with screws, as shown at the top of the previous page. Then, it's just a matter of marking the locations for the lag screws on the underside of the benchtop using the blocking as a guide. Drill the holes and attach the blocking and skirt assembly to the benchtop.

ADD THE VISE BLOCKING. As I mentioned earlier, the vise is sealed off from the hollow dust chamber using some short pieces of blocking butted together. Since these parts are not structural, they are simply held together with glue at the joints. With the assembly complete, attach the vise end blocking to the skirting with screws, as shown at the bottom of the previous page.

NOW THE VISE. No workbench is complete without a good vise. And this multi-use bench is no exception. Set the vise in position and mark the locations for the mounting holes. Drill the holes and use lag screws to secure the vise to the underside of the benchtop (detail 'a,' bottom of previous page).

SEALING PANEL. To complete the benchtop, you'll need to cut a thin plywood panel to fit between the skirting on the underside. This panel makes the dust chamber completely airtight. However, since you may want to access the interior of the workbench in the future, be sure to attach the sealing panel to the blocking with screws only. (You should also avoid pushing bench dogs below the surface of the benchtop).

FINAL DETAILS. With the sealing panel in place, the workbench is ready to attach to the lift table. It's pretty heavy, so it might be a good idea to have a helper assist in setting it in place. To keep the benchtop in position, I used sheet metal screws through the lower part of the skirting into the lift table edge (above).

BUMPERS. On my lift cart, the handle brackets (visible in the construction overview, page 21) interfered with the workbench skirting in the collapsed position. This skewed the table slightly. To compensate for this, I made a couple of hardwood bumpers (detail 'a,' above). They're simply attached to the framework of the lift table with sheet metal screws. W

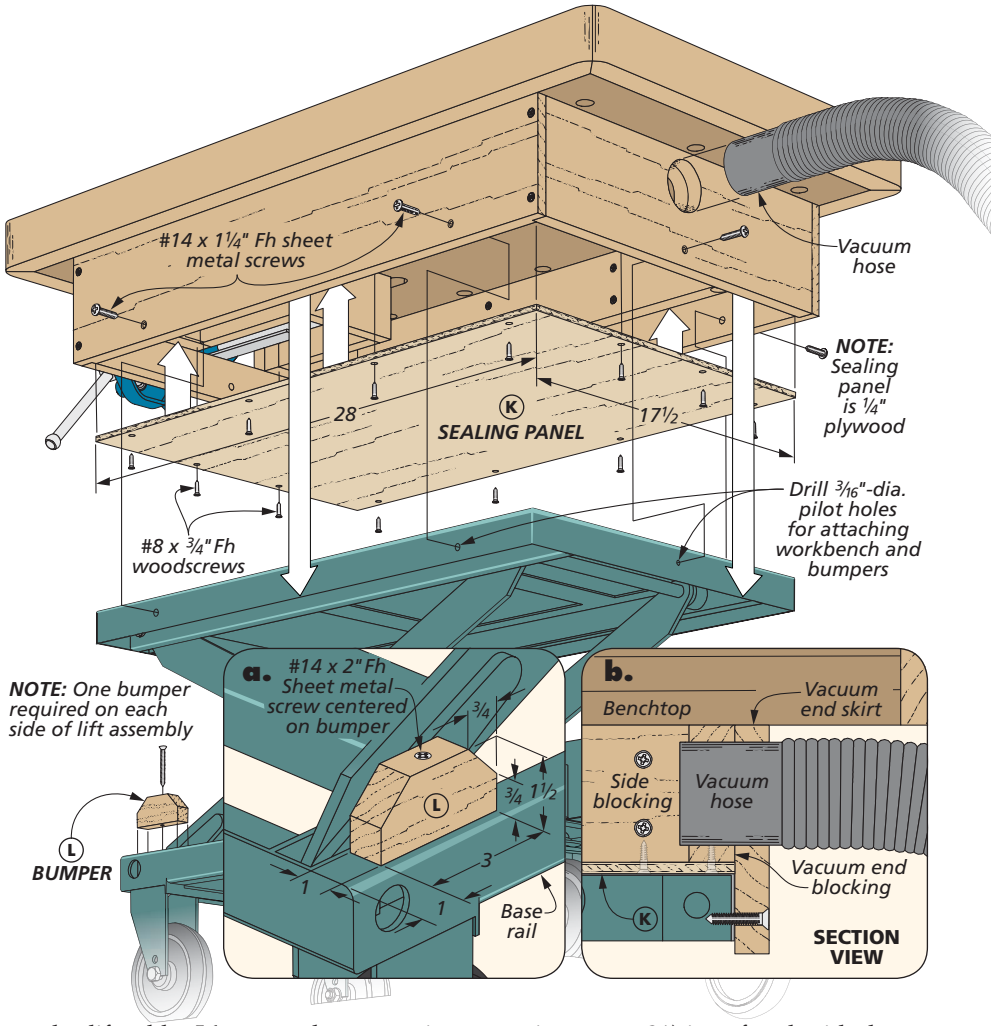

Materials, Supplies & Cutting Diagram

A	Benchtop (1)	2¼ MDF - 19 x 35¼
B	Side Edging (2)	1¼ x 2¼ - 37¾
C	End Edging (2)	1¼ x 2¼ - 21½
D	Side Skirts (2)	¾ x 5 - 29½
E	Vise End Skirt (1)	¾ x 5 - 18
F	Vacuum End Skirt (1)	¾ x 5 - 18
G	Side Blocking (2)	1 x 3 - 28
H	Vacuum End Blocking (1)	1 x 3 - 15½
I	Vise End Blocking (2)	1 x 3 - 5½
J	Vise Blocking (3)	¾ x 3 - 6
K	Sealing Panel (1)	¼ ply. - 17½ x 28
L	Bumpers (2)	1 x 1½ - 3

- (36) #8 x 1½" Fh Woodscrews
- (12) #8 x ¾" Fh Woodscrews
- (6) ¼" x 3½" Lag Screws w/Washers
- (4) ⅜" x 2" Lag Screws w/Washers
- (6) #14 x 1¼" Fh Sheet Metal Screws
- (2) #14 x 2" Fh Sheet Metal Screws
- (1) 7" Woodworker's Bench Vise
- (1) Hydraulic Scissor-Lift Table

1¼"x 5" - 60" Hard Maple (3.1 Bd. Ft.)

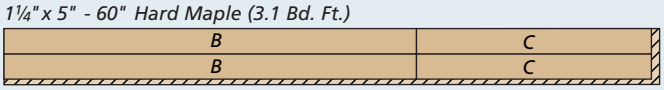

¾"x 6" - 60" Hard Maple (2.5 Bd. Ft.)

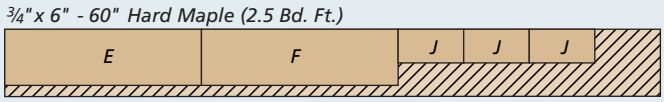

¾"x 6" - 60" Hard Maple (2.5 Bd. Ft.)

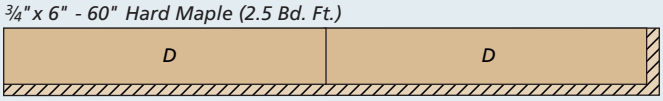

ALSO NEEDED: *One 48"x 48" Sheet of ¼" Birch Plywood*
One 49"x 97" Sheet of ¾" MDF

1"x 4" - 96" Hard Maple (3.3 Bd. Ft.)

Weekend Project

Kitchen Spice Carousel

Solid-wood construction and interesting drill press techniques put an attractive new spin on your spice collection.

While woodworking is my primary hobby, I also enjoy spending time in the kitchen. I'm not a chef by any means, but my family enjoys some traditional dishes I manage to cook up.

One frustration with working in the kitchen, however, is digging through the cupboard to find spices. The various containers don't stack easily and end up lost in the back of the cabinet.

The spinning rack you see above is a welcome solution to any kitchen countertop. Angled slots display eight jars to keep your most often-used spices readily available. And a lazy Susan bearing allows you to spin the carousel to select the seasoning you need. Best of all, the woodworking is simple, but interesting.

I made two versions of the carousel. One was stained (above) and the other was painted (refer to back cover). If you're painting yours, you can use an inexpensive wood like poplar. For the stained version, I used soft maple.

How-To: PREPARE THE BASE BLANK

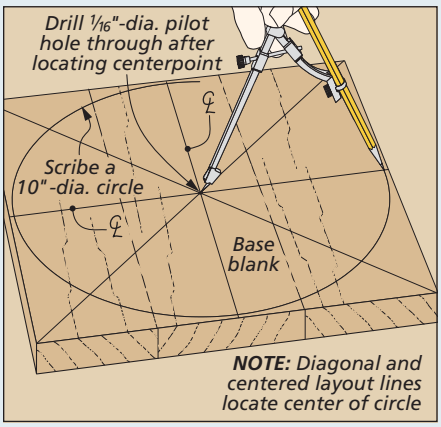

Layout. Strike lines across the diagonals and centered on the edges. Scribe a circle before drilling a pilot hole.

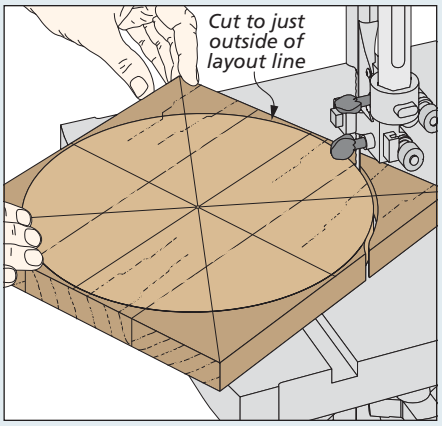

Rough Shaping. Use a band saw to cut the rough shape. Staying close to the line means less cleanup work.

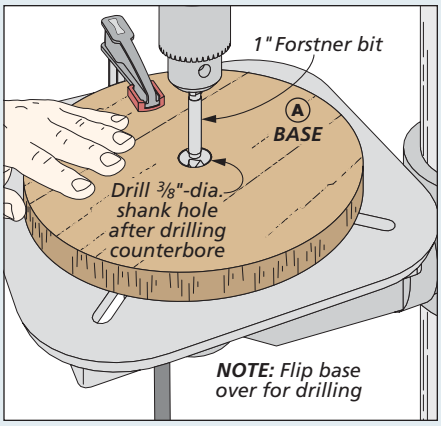

Centered Hole. A counterbored hole is used to mount a bolt for smoothing the edges and later to assemble the body.

CIRCULAR BASE

The carousel is made of two main parts: A wide base and a thick body. They're both round, so you'll want to have a compass and straightedge on hand for laying out the centerlines and circle.

GLUE-UP & LAYOUT. Start constructing the base by gluing up some narrow stock to create a blank at least 10¼" wide. Once the glue dries, trim the blank to form a square and then plane both faces smooth. This makes the layout go a little easier. The drawings at the bottom of the opposite page step you through the layout process. In a nutshell, you'll draw two diagonal lines and two centerlines that locate the slots for the jars.

After scribing a circle on the base blank and cutting it out, I used the drill press to true up and smooth the edges. To do this, you'll use a carriage bolt mounted through the center of the base. So the next operation is to drill a counterbored hole. The counterbore will be used later to assemble the carousel with a lag screw and glue holding everything together in the final assembly.

TRUING UP THE EDGE. The drawings at the bottom of the page show you how I used a sanding block to smooth the edge of the base. Install a carriage bolt through the center and secure it with a washer and nut. This assembly can then be chucked in your drill press. Position the table to within 1" under the base. You'll use the table as a platform for a sanding block (left drawing below).

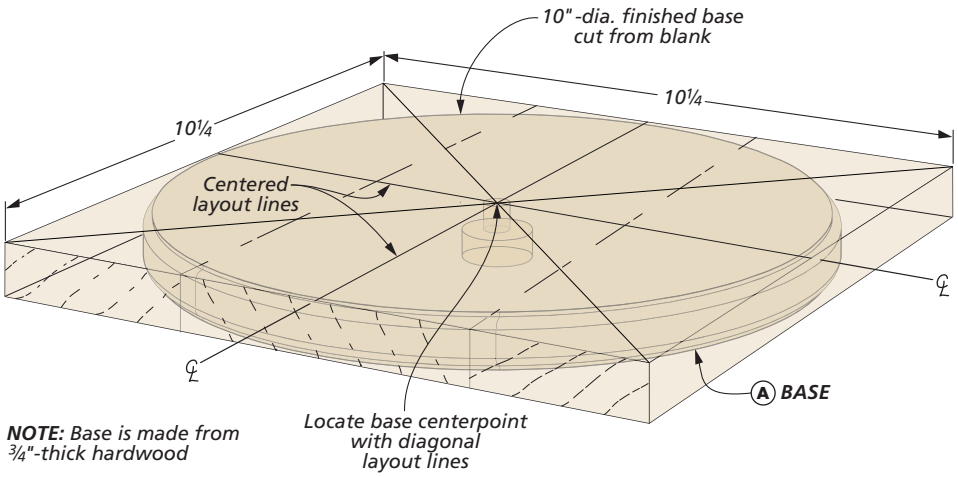

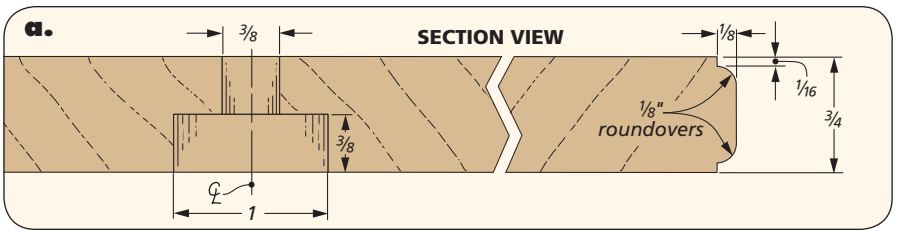

A file removes the high spots then follow up with progressively finer grits of adhesive-backed sandpaper attached to a wood block. You don't want to apply too much pressure — let the abrasive do the work. I started with 100-grit and sanded through 220-grit for a smooth edge.

INDEX MARKS. There's one more layout task that will help later on and that's to extend the lines to the edge of the base, as in the center drawing below. These lines come in handy when you make the body of the carousel.

ROUT ROUNDOVERS. The next step involves some quick work at the router table. I installed a ⅛" roundover bit in the router table. You can see in detail 'a' above and the right drawing below how the bit height is set to create a 1/16" fillet around the edges of the blank.

For this task, I removed the router fence and used the bearing on the roundover bit to guide the workpiece. After routing one edge, flip the blank over and repeat the process on the opposite edge. I took the time here to carefully sand the roundovers smooth, especially the end grain. If you're applying a stain, you can sand up through 400-grit to provide a more even stain color on the end grain.

How-To: COMPLETE THE BASE

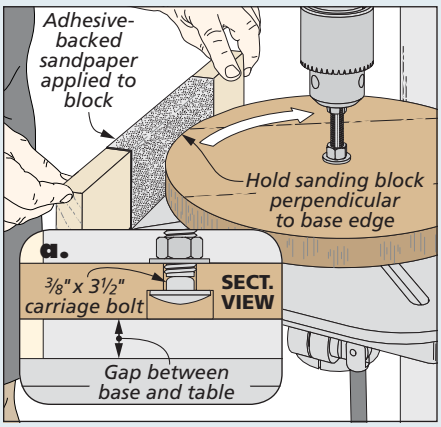

Smoothing the Edge. Use a file and a sanding block to true up the edge of the base and make it smooth.

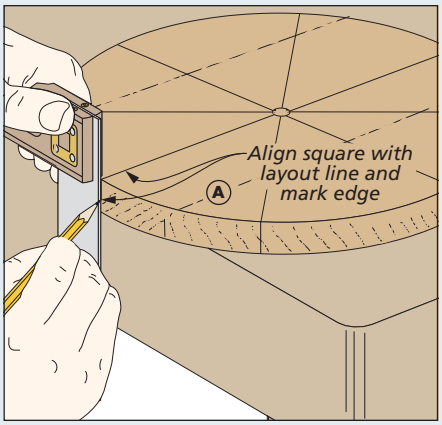

Transferring Lines. To help with aligning the body of the carousel later, extend the lines to the edges.

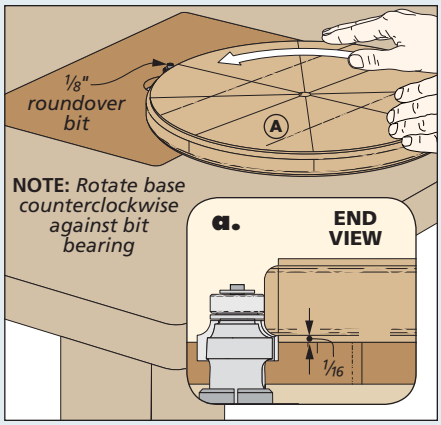

Routing Roundovers. Use the bearing on the roundover bit to guide the workpiece to profile the top and bottom.

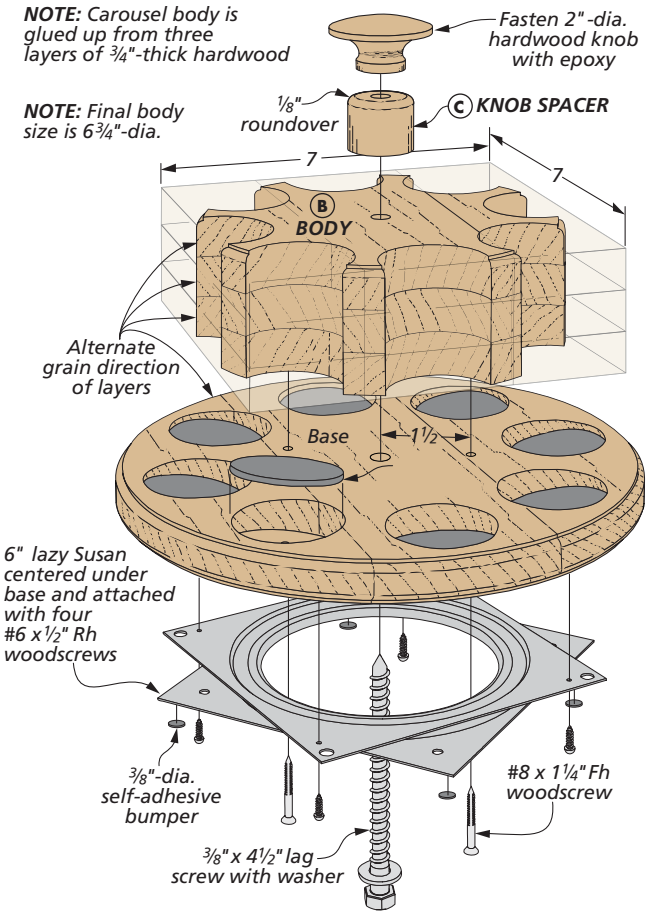

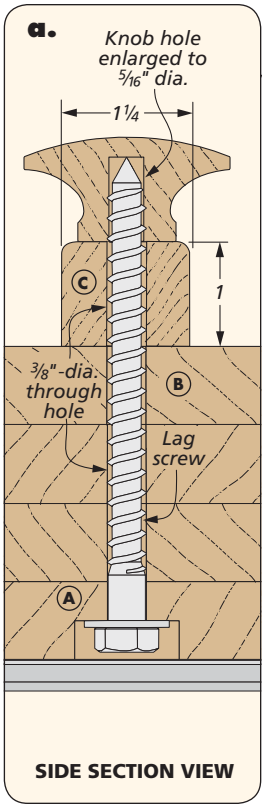

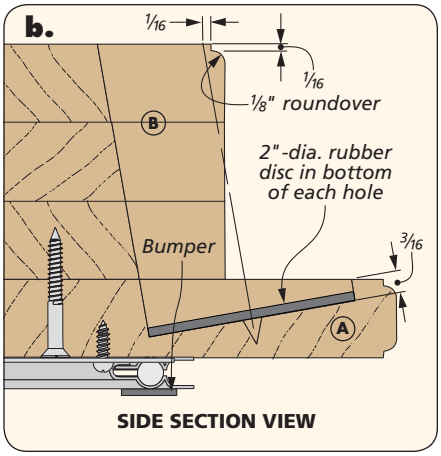

Completing the CAROUSEL

Setting the base aside for now, you can start to work on the body of the carousel that holds the spice jars. Later on, you'll bring the two parts together to drill the holes for the jars. Then you'll add a spacer, knob, and the lazy Susan bearing.

GLUING A THICK BLANK. The body starts with a blank at least 7" wide by 24" long. After planing this smooth, cut three 7" x 7" squares from the blank and then glue them together, alternating the grain direction. This minimizes warping.

Next, lay out the diagonals and centerlines as you did on the base. After scribing the circle, drill the center hole and then cut the blank to shape (Figure 1, opposite page). Using the same carriage bolt, washer, and nut as before, chuck the assembly into your drill press to sand the outside smooth. Then rout a roundover on the top edge only (Figure 2).

DRILLING HOLES FOR THE JARS. The most interesting part of the project comes next. You'll attach the body to the base and then drill the holes that hold the spice jars. If you take a look at detail 'b' above, you'll see that the holes are angled. This tilts the jars back for display when stored and keeps them from falling out when you spin the carousel.

Those layout lines you drew earlier come in handy now. Center the body on

How-To: MAKE & USE THE DRILLING JIG

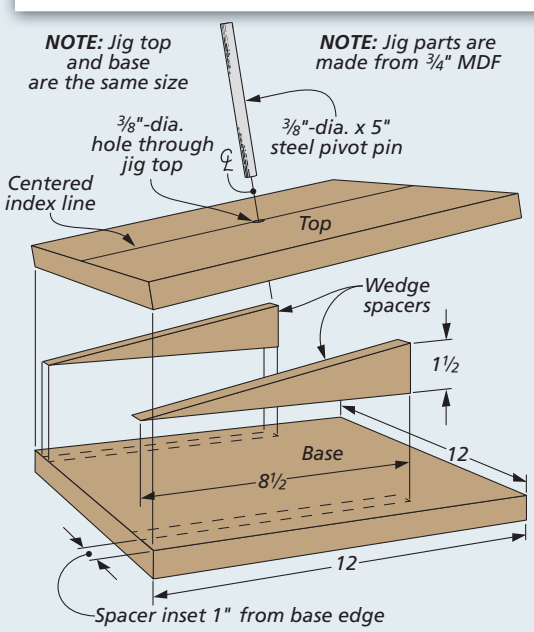

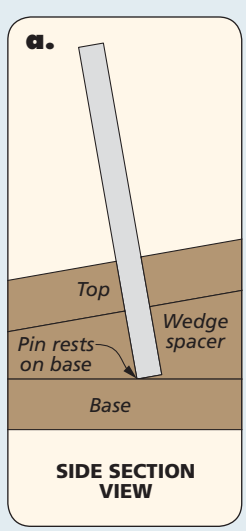

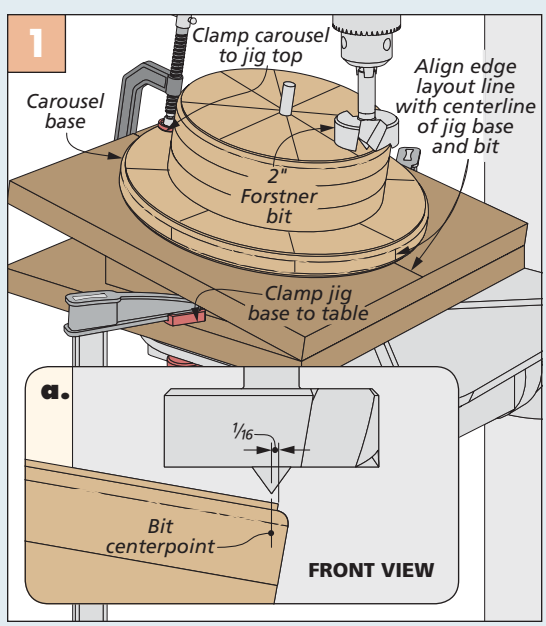

the base, aligning the layout lines, and fasten it with glue and a couple of screws from the bottom placed near the center.

To ensure consistency in the location of the holes and make for easier drilling, I made the drilling jig you see at the bottom of the opposite page. It uses a pivot pin to allow the body and base to rotate for drilling the eight holes.

The box at the bottom of the opposite page and Figure 3 at right provide all of the details you need for setting up the assembly on the drill press. There are a couple of points to keep in mind. First, center the drill bit 1/16" in from the edge of the fillet on the top edge (Figure 1a, bottom of opposite page).

The other thing to figure out is how to get a consistent depth for all of the holes. Figure 3a at right shows the goal. To set this depth, I drilled the first hole, carefully checking the depth as I went. Then I set the depth stop on my drill press to drill the remaining holes.

SANDING & ASSEMBLY. Sanding the inside of all the holes was a bit of a challenge. What I found works best is to use a hand drill with a 1½"-dia. sanding drum (Figure 4). Ease the sharp edges of the holes with some sandpaper before adding the knob and applying a finish.

In the main drawing on the opposite page, you'll see how the knob is attached. To elevate it above the jars, I added a spacer made from a dowel. I eased the end of the dowel with sandpaper, then I cut it to length and drilled a centered through hole. Detail 'a' on the facing page shows how the assembly is held together with a lag screw and washer. I used glue to secure all of the parts.

FINISHING TOUCHES. To finish the maple carousel, I used *Pecan* water-based stain and painted the inside of the holes black. For the painted carousel, I applied *Somerset Gold* milk paint followed by a coat of *Basil Green* milk paint. I sanded some areas through to bare wood to simulate wear and then applied a burnt umber glaze. The stain, paint, and glaze are from *General Finishes*. The final coat was spray lacquer (refer to Sources, page 67).

The last items to add are the rubber discs, a lazy Susan bearing, bumpers, and the spice jars. Once the jars are filled with your favorite spices, don't be surprised if your dinner guests ask you to make a spice carousel for their kitchen. W

How-To: SHAPE THE CAROUSEL BODY

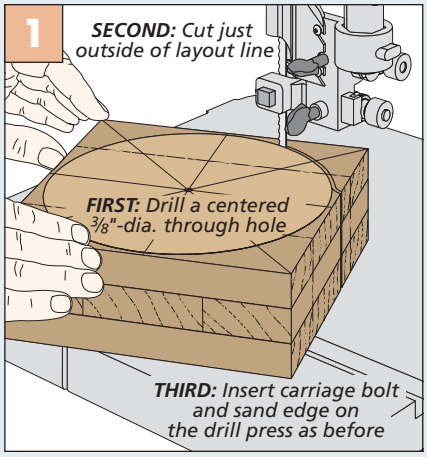

Cutting a Circle. After laying out lines and scribing the circle, cutting the body to shape is an easy task.

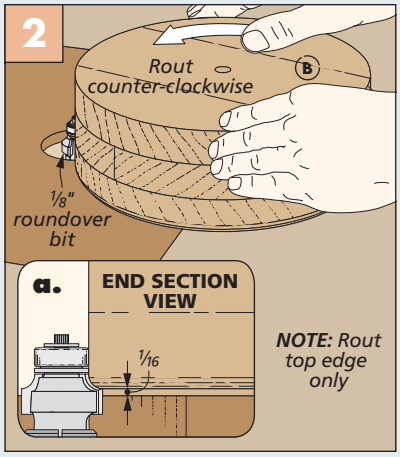

Roundover. Using the same setup at the router table you used on the base, round over the top edge.

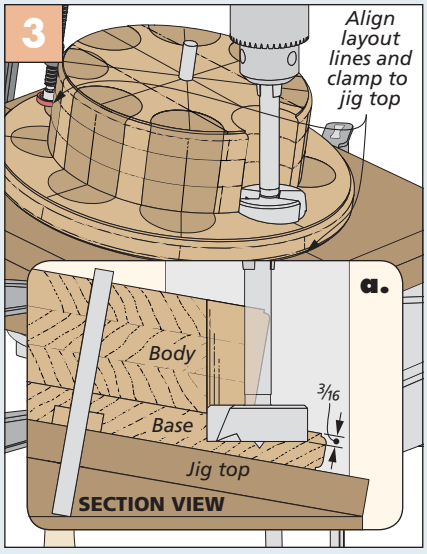

Drilling Large Holes. With a 2"-dia. Forstner bit and a jig, drilling the holes for the spice jars goes quickly.

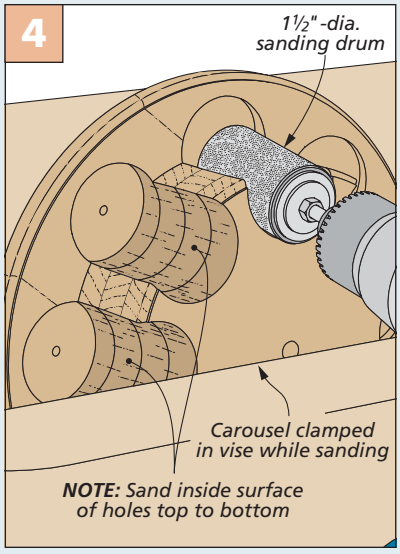

Sanding Smooth. Use a sanding drum in a hand-held drill to sand the inside of the holes smooth.

Materials, Supplies & Cutting Diagram

A	Base (1)	¾ x 10-dia.
B	Body (1)	2¼ x 6¾-dia.
C	Knob Spacer (1)	1¼-dia. x 1

- (2) #8 x 1¼" Fh Woodscrews
- (1) 2"-dia. Hardwood Knob
- (1) ⅜" x 4½" Lag Screw
- (1) ⅜" Washer
- (1) 6"-dia Lazy Susan Bearing
- (4) #6 x ½" Rh Woodscrews
- (8) 2"-dia. Rubber Discs
- (4) ⅜"-dia. Self-Adhesive Bumpers
- (8) Spice Jars

¾"x 5" - 36" Poplar or Soft Maple (1.3 Bd. Ft.)

¾"x 5½" - 48" Poplar or Soft Maple (1.9 Bd. Ft.)

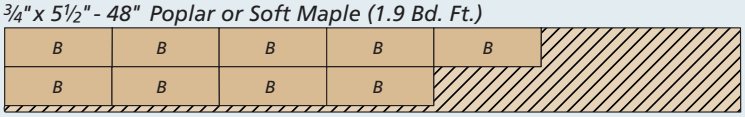

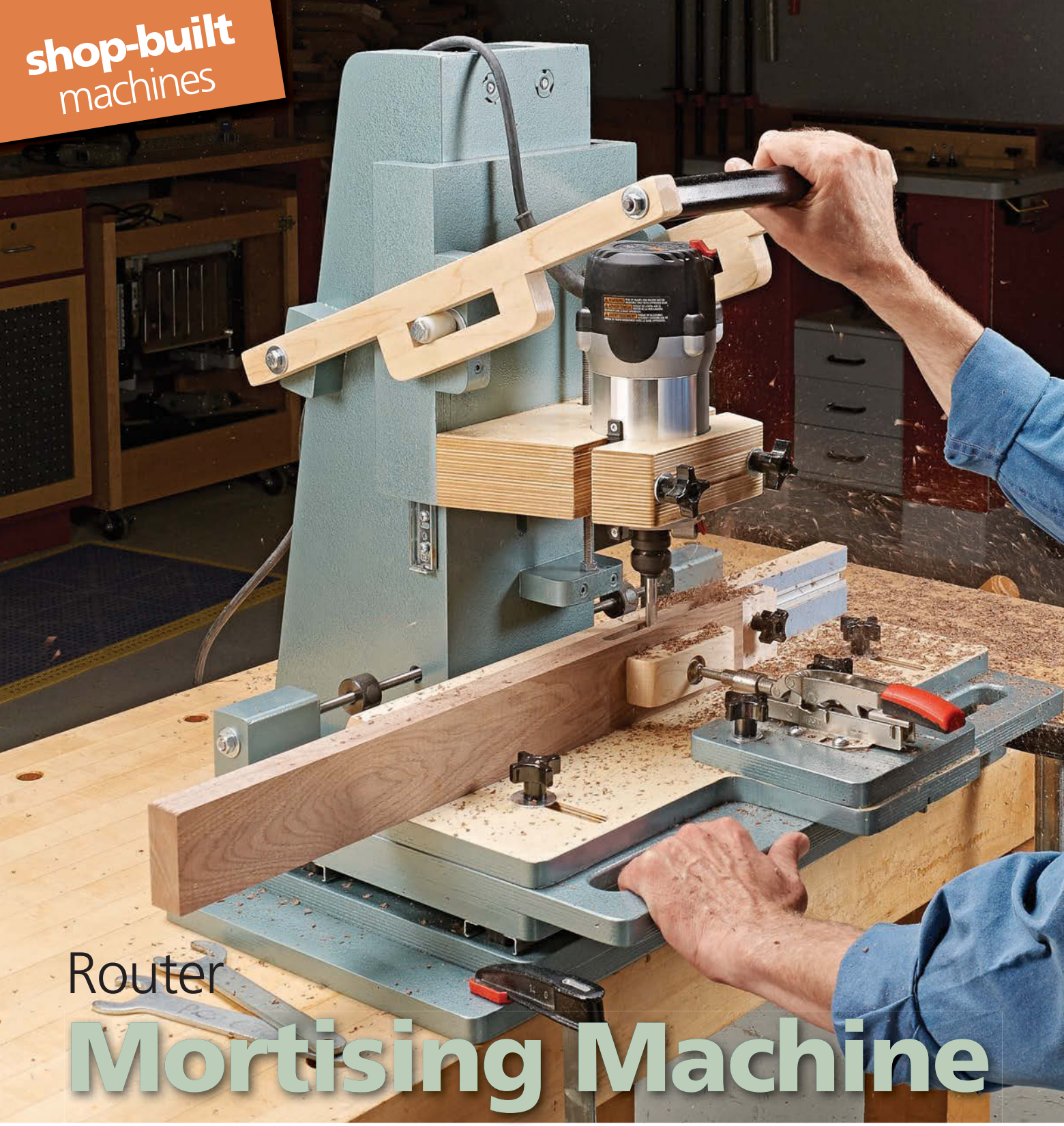

Router Mortising Machine

Most projects I build have at least a few mortise and tenon joints in them. And of the two parts, the mortise causes the biggest headache. If that's the case for you, then maybe it's time to upgrade from the drill press and chisel method. A dedicated mortising machine may be just the ticket.

EASY TO BUILD. Complexity is the big obstacle to most shop-built mortising machine plans. This design has a "keep-it-simple" philosophy. It's mostly built from plywood parts that are glued and screwed together. The moving components — the router carriage and sliding table — operate with heavy-duty, full-extension drawer slides. A no-nonsense stop system and a commercial toggle clamp make cutting identical mortises a snap. Common T-nuts and studded knobs round out the hardware list.

POWER SOURCE. This mortising machine uses a medium-sized router motor as the power source. I find that a variable-speed router gives you more versatility. But even with a single-speed router, this machine will make creating accurate mortises a quick and easy process.

Construction Overview / OVERALL DIMENSIONS: 26"W x 23½"H x 21⅜"D

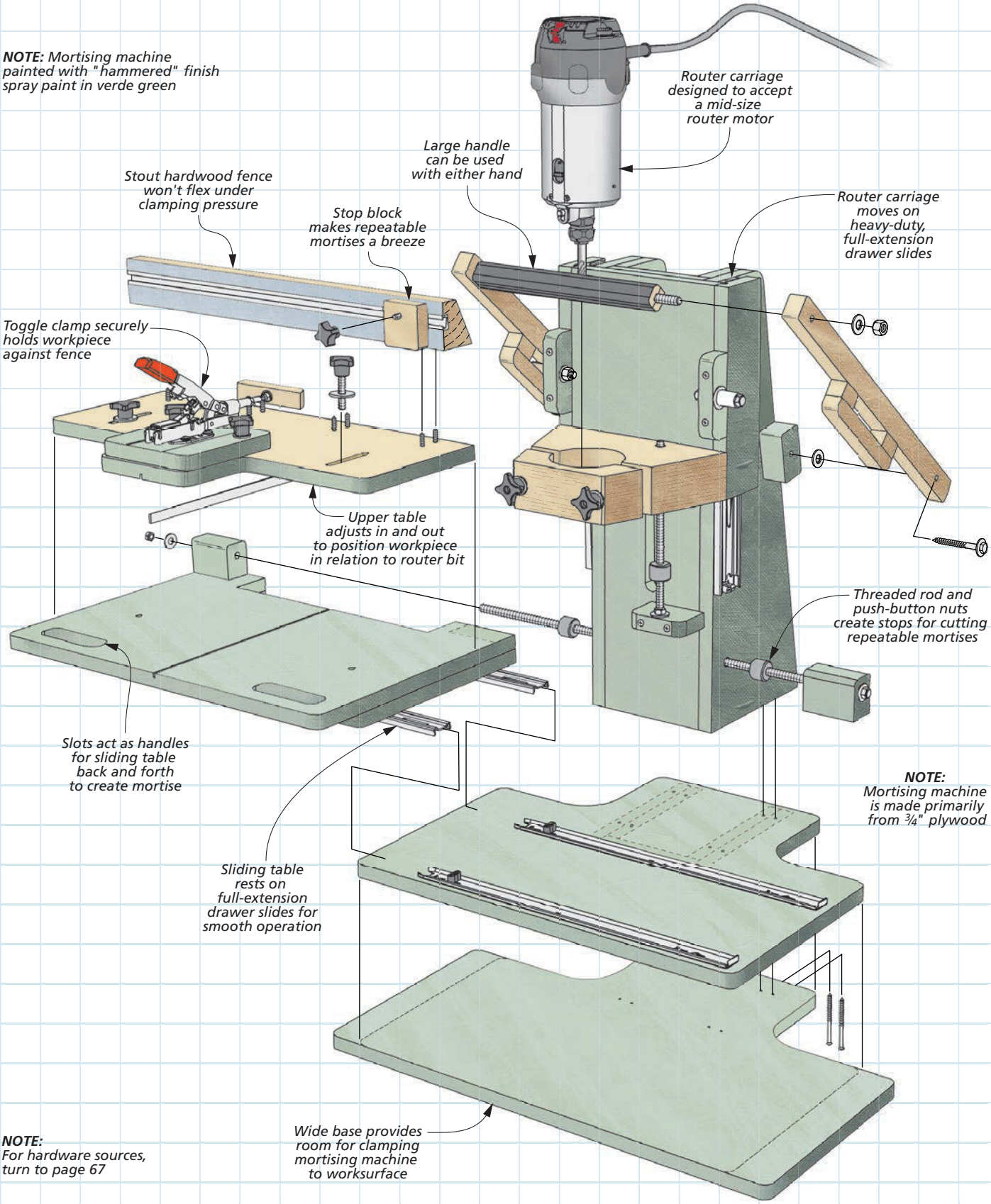

NOTE: For hardware sources, turn to page 67

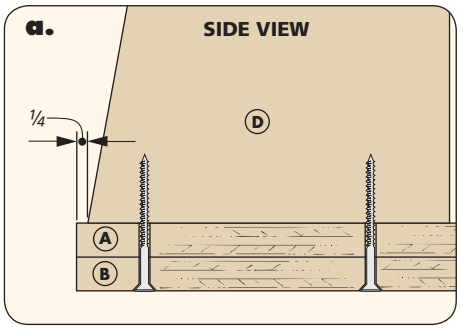

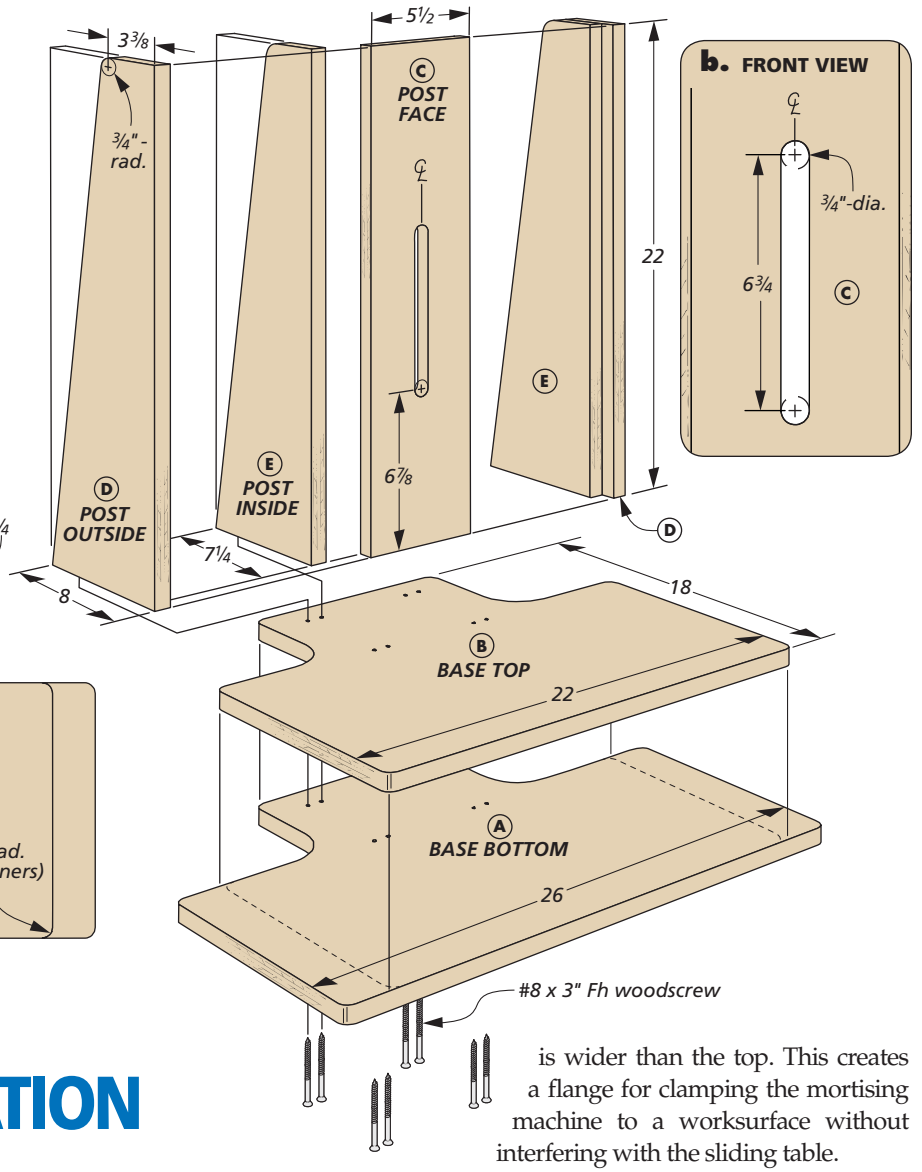

NOTE: All parts are 3/4" plywood

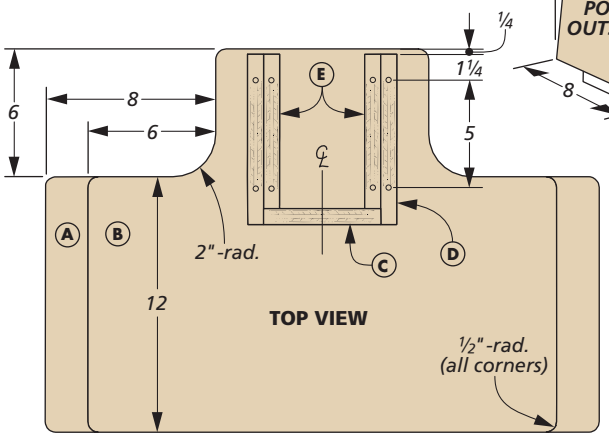

A solid **FOUNDATION**

A fixed, stable core is a must for minimizing vibration from the router and for keeping the workpiece from shifting during the cut. That job falls to the base and post assemblies shown in the drawing above. It's also a good place to start because all the other parts are attached to these two components.

The material of choice here is 3/4" plywood. (I used Baltic birch.) As you can see, the assemblies are laminated from two layers of plywood. The added thickness improves rigidity and provides more meat for attaching heavy-duty hardware.

There's no need for fancy joinery here. Instead, parts are cut to size and fastened with glue and screws. Once the foundation is built, you can move on to the moving parts of the machine.

There's nothing complicated about the construction process. However, I want to highlight several key items.

BASE. You start by building the base. In the drawing, you can see the base bottom is wider than the top. This creates a flange for clamping the mortising machine to a worksurface without interfering with the sliding table.

I cut the base top to its final size and shape and used it as a pattern to trace the rear profile on the blank for the base bottom. After rough-cutting the shape of the bottom layer, the two parts can be glued together. Use a router and flush-trim bit to remove the remaining waste and create a smooth, even edge.

POST. The second assembly is the post. Its function is to provide a mounting point for the router carriage that you'll build momentarily. From the top, the post has a "U" shape (Top View above).

Don't rush things by starting to cut and glue parts together. It's a good idea to knock out a few details on the post face while it's a separate part. The first of these is to cut a slot. The purpose of the slot is to allow a pair of springs that connect the router carriage to the post to retract the carriage between cuts.

I made the slot by drilling end holes and then connecting the dots with a jig saw.

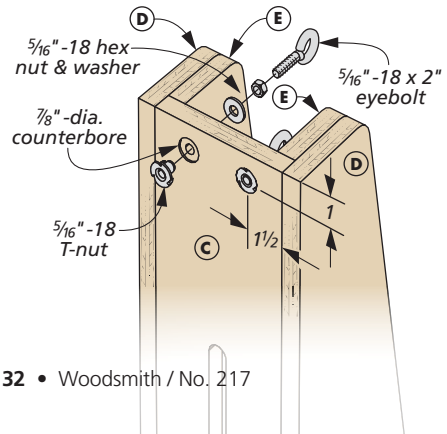

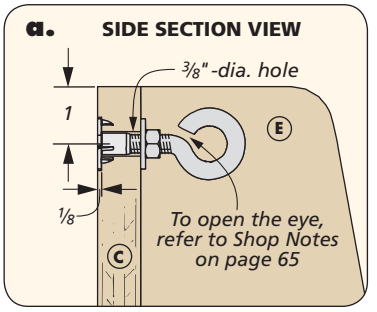

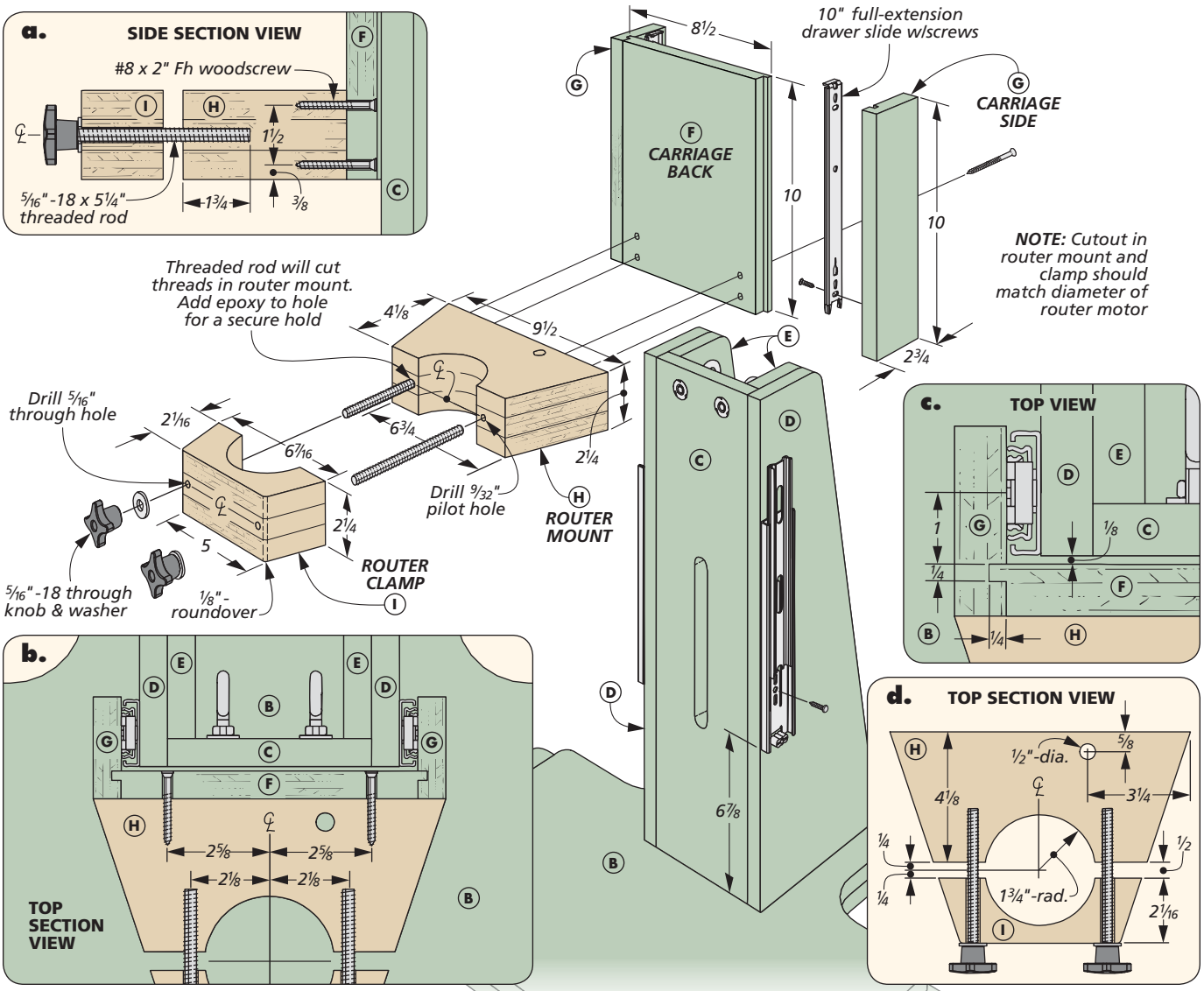

The upper drawing and detail 'b' on the previous page have the dimensions you need for this. Then I reached for files and some sandpaper to straighten and smooth the sides of the slot.

Creating a mounting point for the springs is the other detail on the post face you need to address. The springs are attached to a pair of eye bolts that are anchored to T-nuts. The lower drawings on the facing page show where to locate the through hole and counterbore.

The sides of the post are glued up from two layers of plywood. Take note that the front edges of each layer are offset to create a rabbet sized to accept the post face. When you've completed cutting the taper along the back edge of the sides, you can glue up the post assembly.

The post and base are joined with glue and long screws driven from the bottom, as shown in detail 'a' and the Top View drawing on the previous page.

ROUTER CARRIAGE. Your work on the fixed parts of the mortiser is over. Now it's time to tackle the moving parts. The first of the these is the router carriage assembly that's shown above.

This assembly is made up of two sections. The U-shaped carriage and the router holder. The carriage is the simplest to make. You need to size the parts carefully to wrap around the post and a pair of drawer slides. The goal is a smooth sliding action on the slides. The back and sides are joined with a tongue and groove joint to align for assembly (detail 'c').

The router holder takes a little more explanation. The holder consists of a mount screwed to the carriage and a clamp that secures the router motor to the carriage assembly. These two parts are made from three layers of plywood.

Detail 'd' above shows a through hole near the back edge of the mount that forms part of the stop system to control the depth of the mortise. Both pieces of the router holder have a half-circle cutout on the inside edges. Like I mentioned before, I sized this for a mid-size, *Porter-Cable 892*. You may need to alter the size of the cutout to match your router motor.

Two short pieces of threaded rod, knobs, and washers apply the clamping pressure. I drilled the through holes in the clamp first. To mark the holes in the mount, I used a brad point bit through the clamp. These holes are sized so that the rod cuts threads into the mount for a stronger connection. I backed out the rod and applied a little epoxy to the rods as some insurance before driving them in for good.

The router mount can be screwed to the carriage, as in details 'a' and 'b.' The carriage assembly is attached to the post with full-extension drawer slides (detail 'c'). For the most stability, the slides are arranged to be in the "closed" position as the carriage is lowered.

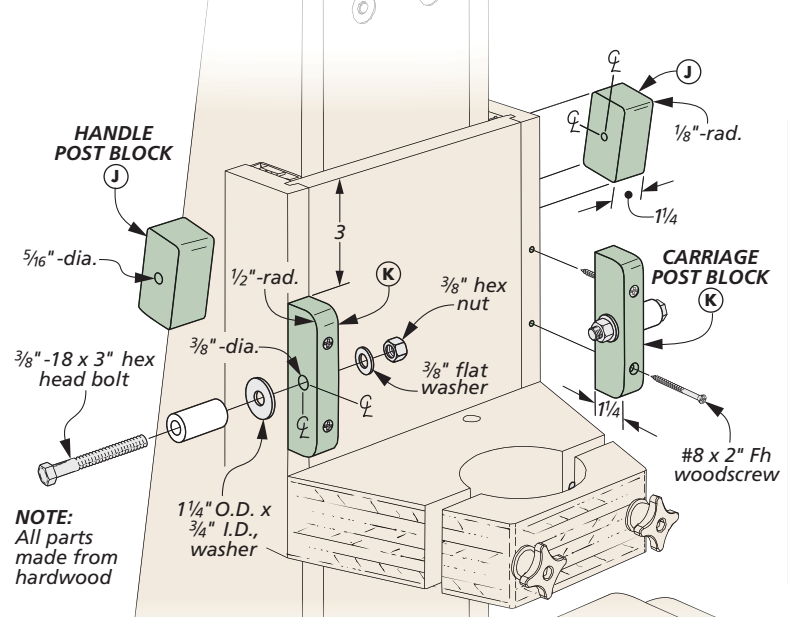

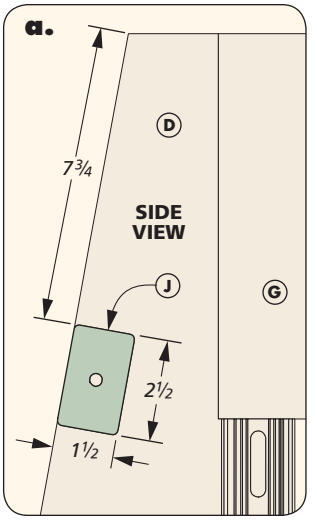

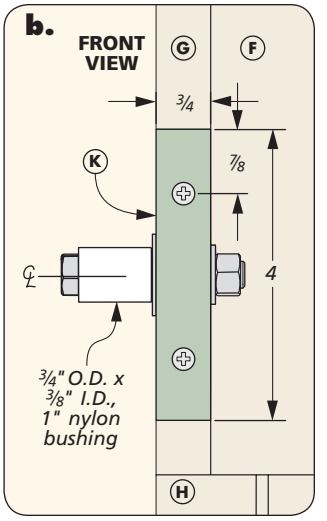

Router carriage CONTROLS

The router carriage needs a little more work before it's ready to accept the router motor. This isn't too difficult, though the bits and pieces you make and add are important for the mortising machine to operate smoothly and accurately.

Let's make a quick rundown of what's ahead, then I'll highlight key points along the way. A large handle controls the up and down motion of the router. A few blocks and hardware additions to the carriage and post are necessary to add this.

In order to create an accurate mortise, you need a way to make cuts to a consistent depth. A basic stop system handles this easily. A pair of springs in the back lift the router clear of the cut and return it to its ready position.

HANDLE BLOCKS. The four blocks shown in the drawing above serve as anchor points for the handle shown on the next page. Unlike the previous parts, these are all made from hardwood for durability and to accept screw threads better.

The first two blocks mount to the post and allow the handle assembly to pivot clear of the wider carriage assembly. Glue the blocks to the post at the location shown in detail 'a.' Then drill a centered pilot hole to accept a 5/16" lag screw that secures the end of the handle.

The other pair of blocks you need to add are attached to the front of the carriage assembly. Instead of a fixed point of connection, the blocks house a bolt and nylon bushing, as you can see in the main drawing above and detail 'b.' The bushing rides in a slot in the handle that draws the carriage up and down.

The carriage blocks are attached with screws. The bolt and bushing are held by a nut and a pair of washers.

DEPTH STOP. The job of controlling the depth of cut falls to the block and hardware assembly shown below. The depth rod block holds a short piece of threaded rod (detail 'a'). I glued it in the same way as the threaded rod in the router mount. You can use the rod to align the block with the hole you drilled earlier in the router mount.

The stop is provided by a fast-acting, push-button nut located below the carriage assembly, as shown in the lower left photo. For quick adjustments, press the button and slide the nut along the

◄ **Quick-Set Stops.** Push the button for fast adjustment. Turn the nut to fine-tune its location.

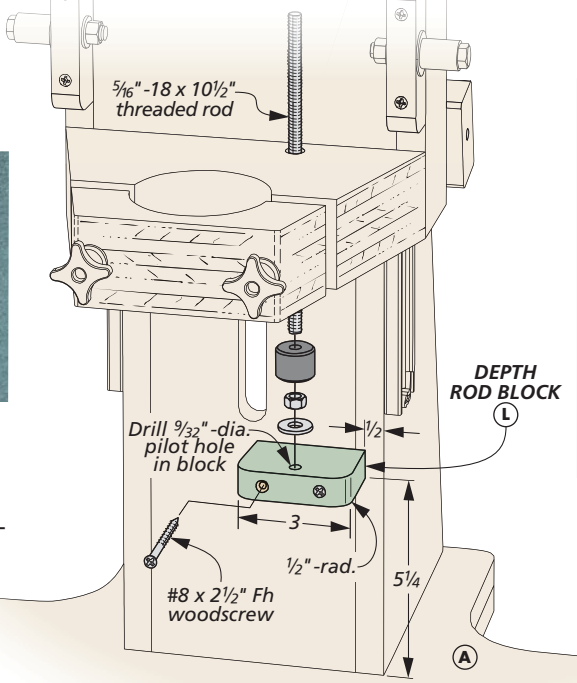

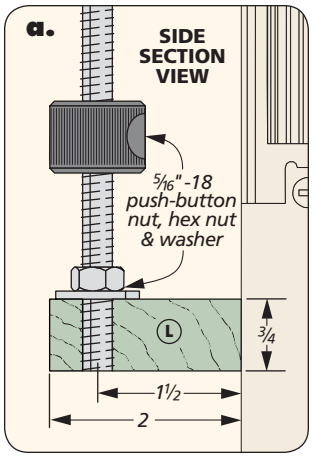

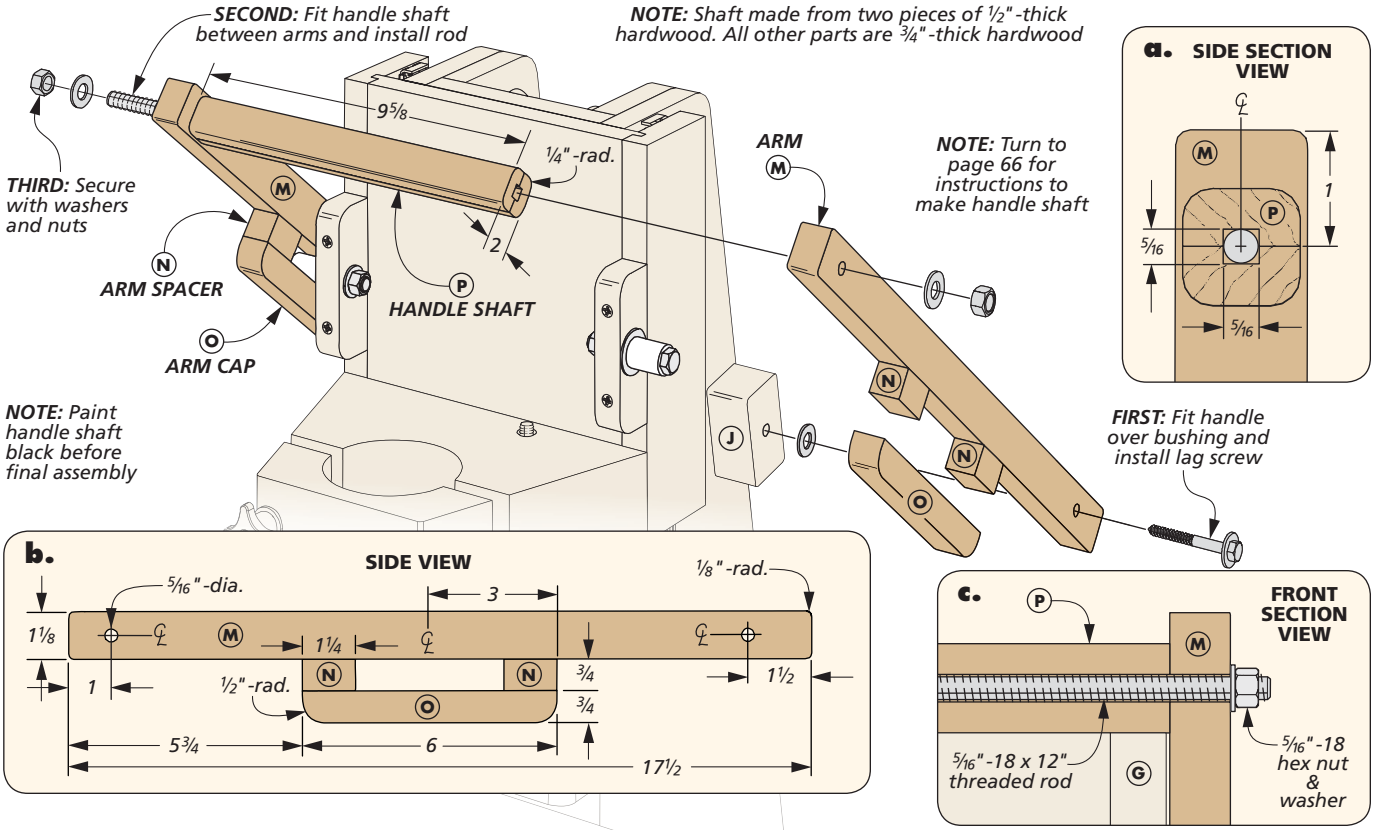

threaded rod. To fine-tune the depth of cut, simply turn the nut as needed.

HARDWOOD HANDLE. With all the preliminary items crossed off the list, you can make the handle. The long, front-mounted handle is easy to use with either hand and provides good leverage for plunging the router bit into the workpiece. The handle is made up of three components — two arm assemblies that sandwich a shaft and threaded rod.

Each arm incorporates a slot that houses the nylon bushing you installed on the carriage. But rather than cutting a slot, I built it up from smaller parts, as you can see in the drawing above and detail 'b.' Two spacers and a cap piece are glued to the main handle piece. What's important here is the width of the spacers. They should be just a hair wider than the bushing. This allows the bushing to move freely but without any slop.

The arm has a hole drilled at each end. One is used to attach it to the post. The other is to join the arms to the handle shaft, as shown in detail 'b.'

SPLIT SHAFT. I was concerned about screw threads holding in the end grain of a solid dowel. To eliminate those worries, I made a two-piece shaft that captures a section of threaded rod. This is illustrated in details 'a' and 'c.' Creating the channel for the threaded rod is easier than it looks. Shop Notes on page 66 covers the technique.

You need to assemble the handle in a specific order. Fit the slot over the bushing and drive lag screws to secure each arm to the post. Then slip the shaft between the arms and add the washers and nuts, as in detail 'c.'

RETURN SPRINGS. Two extension springs are the final elements you need to add. As I said earlier, these springs lift the router carriage and hold it above the workpiece. This gives you plenty of room to move workpieces around and set up the sliding table. One end of each spring is attached to one of the eyebolts on the back side of the post.

The two springs meet at a single screw eye threaded into the back of the carriage (detail 'b'). You can see in detail 'a' how to locate and drill the pilot hole for the screw eye in the back of the carriage.

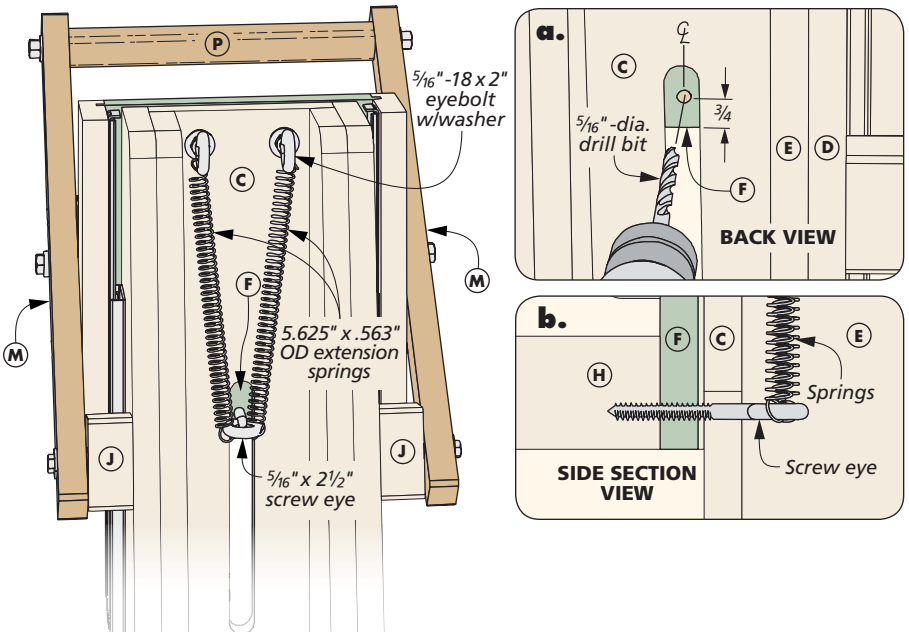

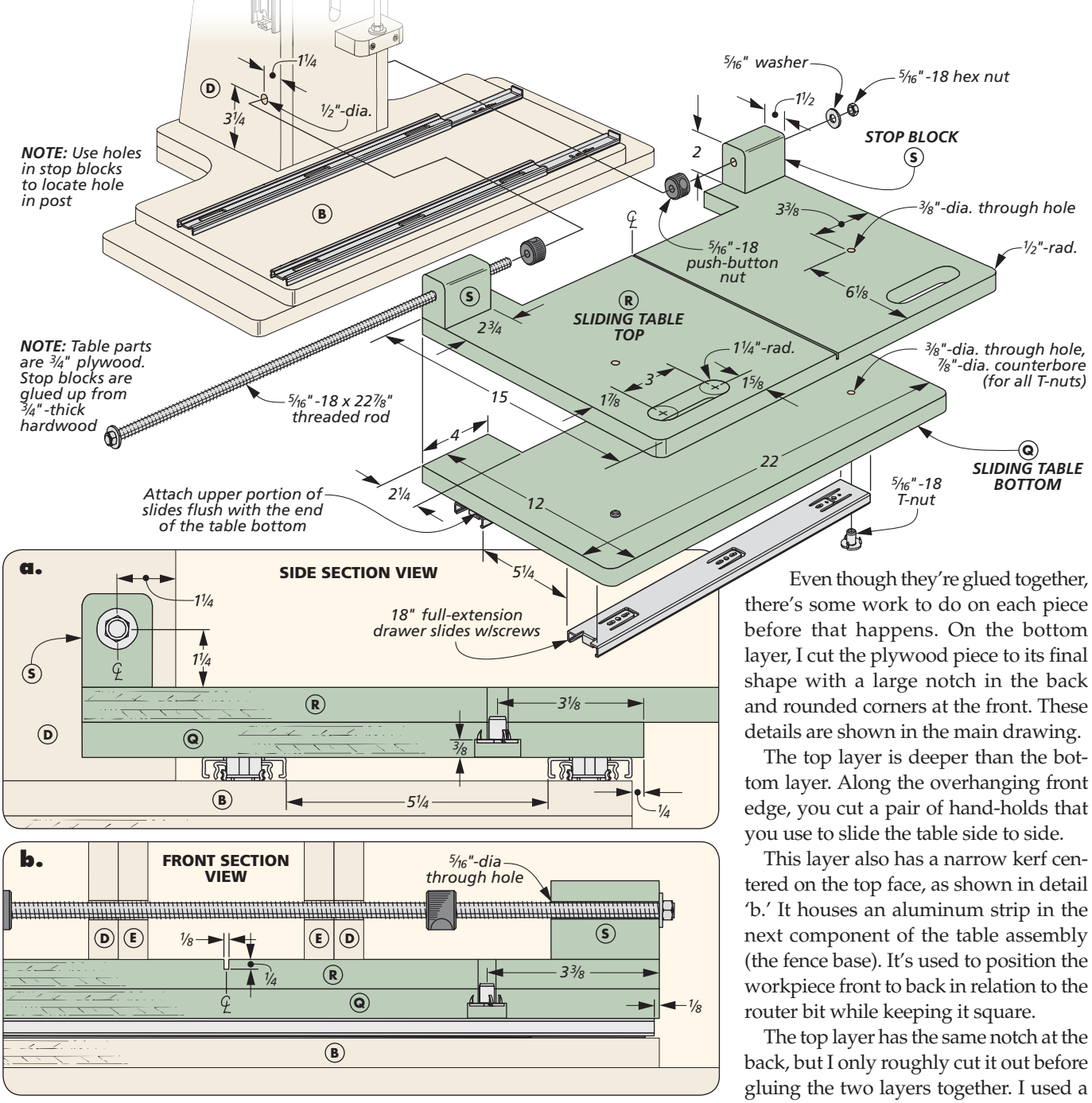

Two-way SLIDING TABLE

The work up until now has been focused on making the mechanism for the router plunge smoothly into a workpiece. From here on, you turn your attention to the workpiece support and control functions of the machine. All that is handled by the table assembly.

There are two separate actions going on. The first is creating a way to line up the workpiece in relation to the bit. While it's adjustable, the setting needs to be "fixed" so that the workpiece can't shift during the mortising process.

The other action moves the securely held workpiece side to side as the bit cuts along the length of the mortise. Fixed and sliding may seem like oil and water. But as we go along, you can see how this table makes it work.

BUILT IN LAYERS. The table is a built-up assembly where each new layer adds a different function. The drawing above gets the ball rolling with the two lower sliding table pieces. These mount to the mortising machine's base with drawer slides. With this arrangement, you can smoothly slide a workpiece side to side to create a smooth mortise.

Even though they're glued together, there's some work to do on each piece before that happens. On the bottom layer, I cut the plywood piece to its final shape with a large notch in the back and rounded corners at the front. These details are shown in the main drawing.

The top layer is deeper than the bottom layer. Along the overhanging front edge, you cut a pair of hand-holds that you use to slide the table side to side.

This layer also has a narrow kerf centered on the top face, as shown in detail 'b.' It houses an aluminum strip in the next component of the table assembly (the fence base). It's used to position the workpiece front to back in relation to the router bit while keeping it square.

The top layer has the same notch at the back, but I only roughly cut it out before gluing the two layers together. I used a router and flush-trim bit to clean up the notch so it matched the layer below.

Take a look at details 'a' and 'b' to install a set of T-nuts in the bottom face of the sliding table. These lock the fence base in position with knobs.

The notch along the back edge of the sliding table wraps around the post. A pair of blocks glued to the "ears" on either end of the notch house a threaded rod. It's used to create the end stops for the mortising machine. Use the holes in the blocks to locate matching holes you need to drill in the post sides (detail 'a').

DRAWER SLIDES. I mentioned earlier that the sliding table is attached with drawer slides. But there's a little more to it. In order to allow the table to slide both left

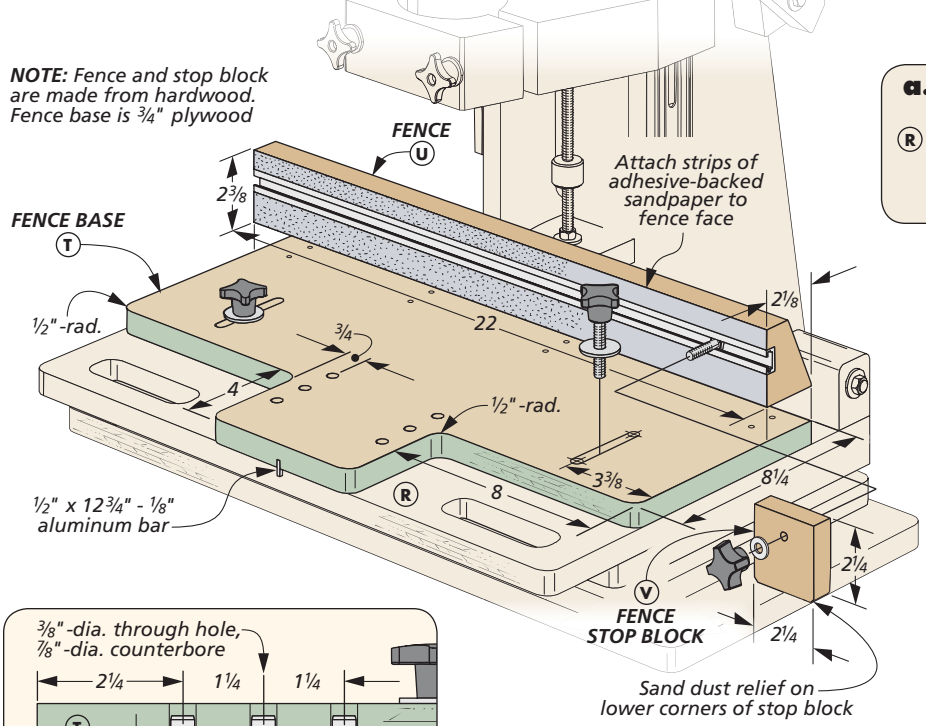

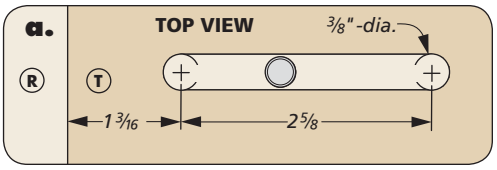

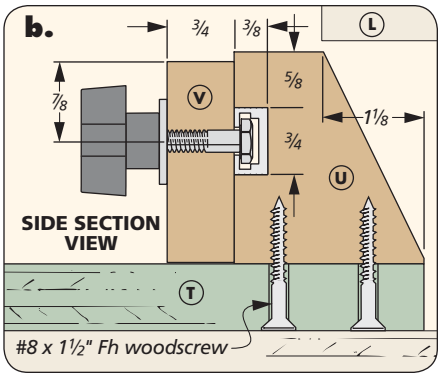

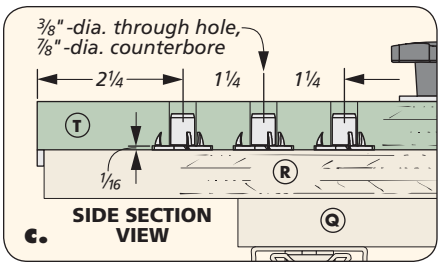

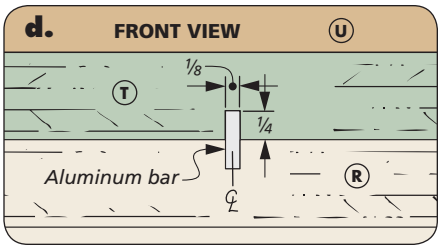

and right, you need to attach the slide components to the machine base and sliding table so they're offset. So when the table is centered, the mechanism is half-open (or half-closed, depending on your point of view). The drawing and details 'a' and 'b' on the previous page have the dimensions for each part. As you install the slides, it's important that the slides are installed parallel to each other and square to the face of the router carriage.

FENCE BASE. Moving up from the sliding table, you come to the fence base shown above. The base does a few things: It supports the workpiece, serves as the mounting point for the fence, and determines the front to back position of the workpiece in relation to the bit.

Several details help accomplish those tasks. An aluminum strip in the bottom face mates with the kerf in the sliding table (detail 'd'). And the slots shown in detail 'a' line up with the T-nuts in the sliding table. Studded knobs and washers complete the task of securing the fence base.

Take a look at the extension tab in the front of the fence base. It holds six more T-nuts that are installed on the bottom face to anchor a toggle clamp that pins the workpiece against the fence, as in detail 'c' and the drawing below.

A STOUT FENCE. The next layer of the table assembly is the fence. It's glued up from hardwood and beveled on the back edge. I installed a length of T-track in the face to hold an adjustable stop, as you can see in detail 'b.' The fence is glued and screwed to the fence base.

One more thing: I applied strips of adhesive-backed sandpaper to the face of the fence above and below the T-track to keep a workpiece from creeping out of alignment while making a mortise.

TOGGLE CLAMP. The final piece of the puzzle is the toggle clamp you see in the drawing below. It's attached to a mounting base, so you can adjust its position depending on the thickness of the piece you're working with. The clamp sits in an angled dado to apply slight downward pressure in use. Turn to page 66 to see how the dado is cut. I glued a wide clamp block to the swivel head of the clamp to distribute the pressure more evenly.

The mortising machine is now ready to be put into action. The straightforward design helps keep this a simple process. You can read about it in the step-by-step instructions on the next page.

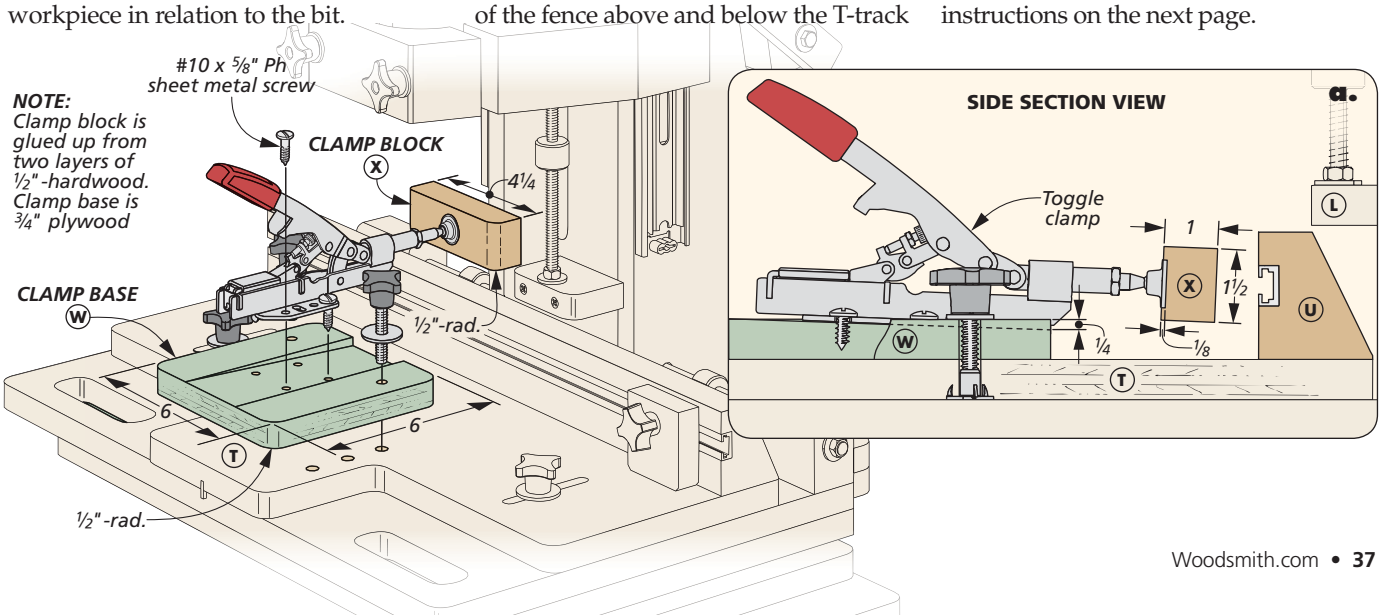

Set up & use the MORTISING MACHINE

The easy-to-use controls on the mortising machine make setting up and using it quick to master. The various stops take the hassle out of routing identical mortises. In fact, you will need to lay out a mortise on only one of the workpieces. When it's time to rout the next part, just slip it into place on the table, and you're ready to get started.

In use, the mortising machine works best with either a spiral bit or an end mill. (Take a look at the article on page 12 for more about these bits.) You rout the mortise in a series of several shallow passes — usually no more than ¼" for each pass. You remove a lot of waste in making a mortise, so you may want to stop and vacuum the chips from time to time. W

How-To: SET UP THE MORTISING MACHINE

1

Lay Out Mortise. Draw a complete mortise on one of your workpieces. You use this to adjust the table and set the stops on the mortising machine.

2

Set the Depth Stop. I mark the depth of the mortise on the end of the workpiece. Lower the router bit to the line and position the nut on the depth stop at the post.

3

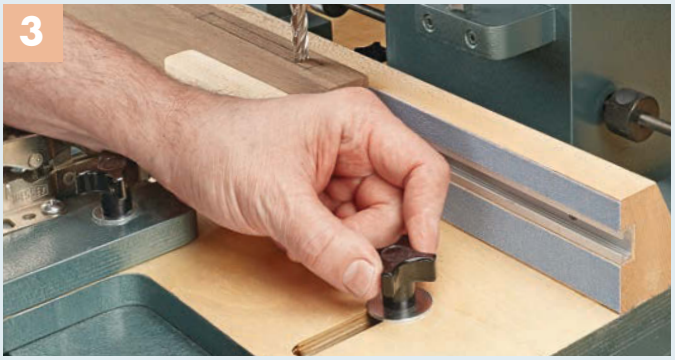

Align Table & Fence. With the workpiece against the fence, use the mortise layout to adjust the table so that the bit is centered on the mortise. Don't forget to lock the table in place.

4

Set Right End Stop. Slide the table so the bit is directly over the right end of the mortise. Move the pushbutton nut on the right side of the machine so it's against the side of the post.

5

Set Left End Stop. With the bit over the left end of the mortise, set the stop nut on the left side in the same way. Now you don't have to worry about overshooting your lines as you rout.

6

Position the Stop Block. Chances are you need to rout the same size mortise in multiple parts. Set the stop block on the fence to simplify and speed up the process.

How-To: USE THE MORTISING MACHINE

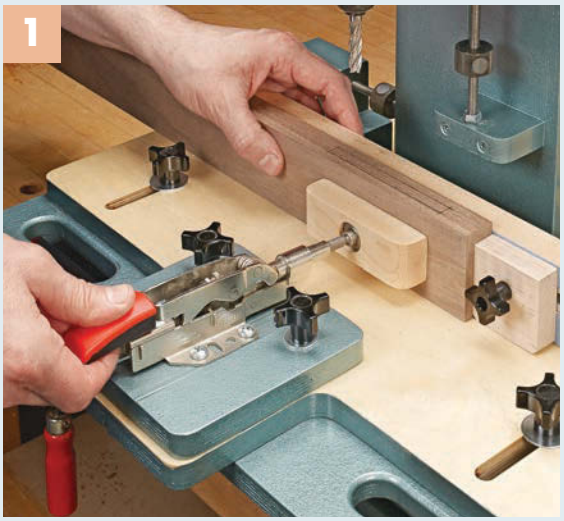

Secure the Workpiece. After following the steps to set the stops and adjust the table, you can slip the workpiece into place against the fence and stop. The toggle clamp presses the workpiece against the fence and prevents it from shifting during the cut.

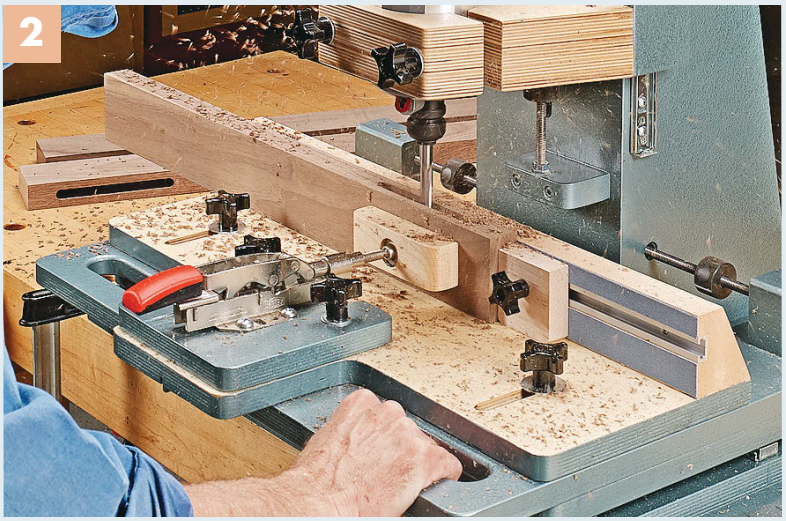

Routing Mortises. Starting at one end of the mortise, plunge the bit 1/8" to 1/4" deep into the workpiece and slide the table to the other end of the mortise. Lower the bit slightly and make a second pass. Repeat this process until the carriage contacts the depth stop. Remove the part and install another to continue making mortises.

Materials, Supplies & Cutting Diagram

A	Base Bottom (1)	3/4 ply. - 18 x 26
B	Base Top (1)	3/4 ply. - 18 x 22
C	Post Face (1)	3/4 ply. - 5 1/2 x 22
D	Post Outsides (2)	3/4 ply. - 8 x 22
E	Post Insides (2)	3/4 ply. - 7 1/4 x 22
F	Router Carriage Back (1)	3/4 ply. - 8 1/2 x 10
G	Router Carriage Sides (2)	3/4 ply. - 2 3/4 x 10
H	Router Mount (1)	2 1/4 ply. - 4 1/8 x 9 1/2
I	Router Clamp (1)	2 1/4 ply. - 2 1/16 x 6 7/16
J	Handle Post Blocks (2)	1 1/2 x 1 1/4 - 2 1/2
K	Carriage Post Blocks (2)	3/4 x 1 1/4 - 4
L	Depth Rod Block (1)	3/4 x 2 - 3
M	Arms (2)	3/4 x 1 1/8 - 17 1/2
N	Arm Spacers (2)	3/4 x 13/16 - 1 1/4
O	Arm Caps (2)	3/4 x 13/16 - 6
P	Handle Shafts (2)	1/2 x 1 - 9 5/8
Q	Sliding Table Bottom (1)	3/4 ply. - 12 x 22
R	Sliding Table Top (1)	3/4 ply. - 15 x 22
S	Stop Blocks (2)	1 1/2 x 2 - 2 3/4
T	Fence Base (1)	3/4 ply. - 12 1/4 x 22
U	Fence (1)	2 1/8 x 2 3/8 - 22
V	Fence Stop Block (1)	3/4 x 2 1/4 - 2 1/4
W	Clamp Base (1)	3/4 ply. - 6 x 6
X	Clamp Block (1)	1 x 1 1/2 - 4 1/2

- (8) #8 x 3" Fh Woodscrews
- (10) 5/16"-18 T-nuts
- (2) 5/16"-18 x 2" Eye Bolts
- (16) 5/16" Flat Washers
- (7) 5/16"-18 Hex Nuts
- (3) 5/16"-18 x 24" Threaded Rods
- (2) 5/16"-18 Through Knobs
- (2) #8 x 2" Fh Woodscrews
- (2) 12" Full-Extension Slides w/Screws
- (2) 3/8"-16 x 3" Hex Bolts
- (2) 3/8"-16 Hex Nuts
- (2) 3/8" Flat Washers
- (2) 1 1/4" OD x 3/4" ID Washers
- (2) 3/8" ID x 3/4" OD Nylon Spacers
- (6) #8 x 2 1/2" Fh Woodscrews
- (3) 5/16"-18 Pushbutton Nuts
- (2) 5/16" x 3" Lag Screws
- (1) 5/16" x 2 1/2" Screw Eye
- (2) 5.625" x .563" OD Extension Springs
- (2) 18" Full-Extension Slides w/Screws
- (1) 1/2" x 12 3/4" x 1/8" Aluminum Bar
- (1) 24" T-Track w/Screws
- (8) #8 x 1 1/2" Fh Woodscrews
- (1) 1/4"-20 x 1 1/4" Hex Bolt
- (1) 1/4"-20 Through Knob
- (1) 1/4" Flat Washer
- (4) 5/16"-18 x 1 3/4" Studded Knobs
- (2) 5/16" Fender Washers
- (1) Toggle Clamp
- (4) #10 x 5/8" Ph Sheet Metal Screws

3/4" x 5 1/2" - 72" Maple (2.8 Bd. Ft.)

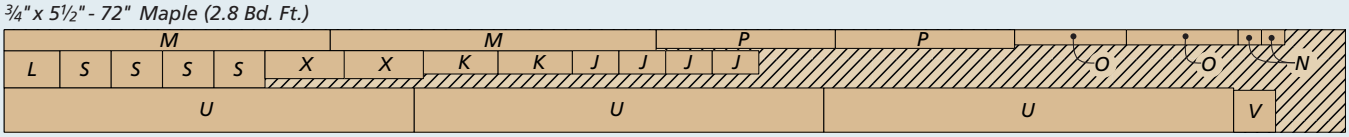

ALSO NEEDED: *One 60" x 60" Sheet of 3/4" Baltic Birch Plywood*

Heirloom Project

Cherry Hutch

Every set of dining room furniture needs a great place for storing dinnerware. This elegant cherry hutch provides the perfect solution.

While a good table (surrounded by a set of chairs) is the centerpiece of any dining room, the hutch is the furniture component that does most of the "heavy lifting." It serves as both a storage cabinet for a variety of dinnerware, as well as a display area for your fine china and other dishes.

STORAGE WITH STYLE. At over four feet wide and nearly seven feet tall, this hutch serves that role quite nicely. And the cherry construction, paired with the glass panels on the doors and ends of the upper cabinet, means that it looks great doing it.

DETAILS OF THE DESIGN. The hutch incorporates a wide range of woodworking techniques. You'll be able to knock out some of the elements, such as the cabinets and face frames, with pocket hole joinery. Other assemblies, like the doors and the back panels, make use of a cope and stick joint that's easy to create using a pair of bits at your router table. The drawers are built using half-blind dovetails that can be made with a dovetail jig (photo, far right).

All in all, the result is a cabinet that not only looks nice, but also serves as a worthy complement to the table and chairs built in Woodsmith No. 216. Simply turn the page to get started.

Construction Overview / OVERALL DIMENSIONS: 54¾"W x 80"H x 19¼"D

Cornice built up from three layers and screwed to upper cabinet

Built-in puck lighting illuminates contents of upper cabinet

Side assemblies made with cope and stick joints and feature glass panels

Upper cabinet doors built similarly to the side assemblies

Upper shelves incorporate a plate rail and thick glass panels

Base cabinet top covered with cherry veneer and surrounded by profiled edging strips

Upper and lower cabinets connected with stacking plates

Cabinet backs are frame and panel assemblies with cope and stick joints

NOTE: Refer to page 67 for hardware sources

Drawers feature half-blind dovetails and full-extension drawer slides for easy access

Bullnose molding adds a decorative detail to bottom of hutch

Base cabinet doors have cherry plywood panels captured in grooves in the rails and stiles

Edged plywood shelves rest on shelf pins

Cabinet face frames assembled with pocket screws

▲ Glass panel doors are partially inset in the face frame. It's easy to cut the rabbets to fit the frame.

◄ The two drawers in the base cabinet have cherry fronts with maple sides and backs. The parts are joined using half-blind dovetails, with the front rabbeted to form a lip.

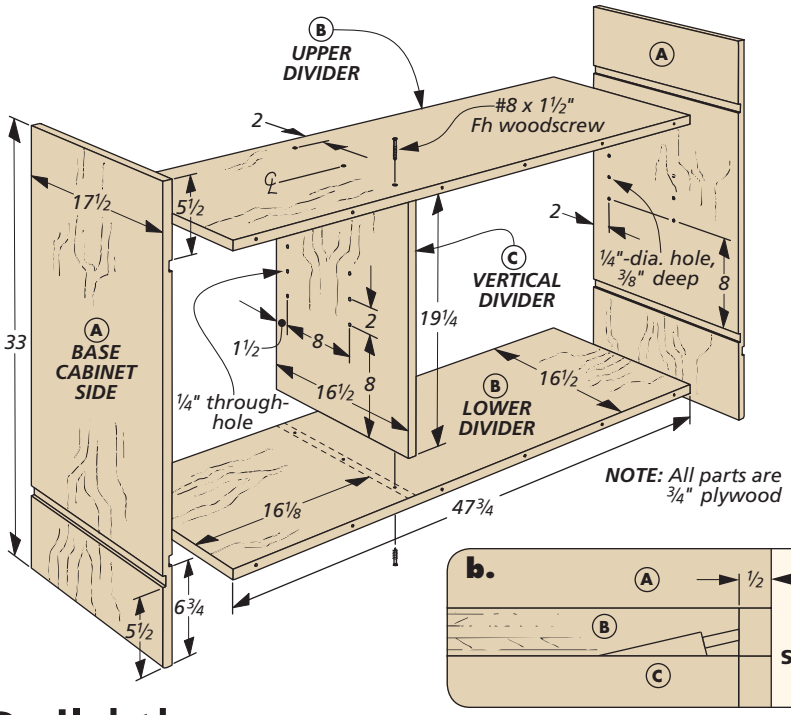

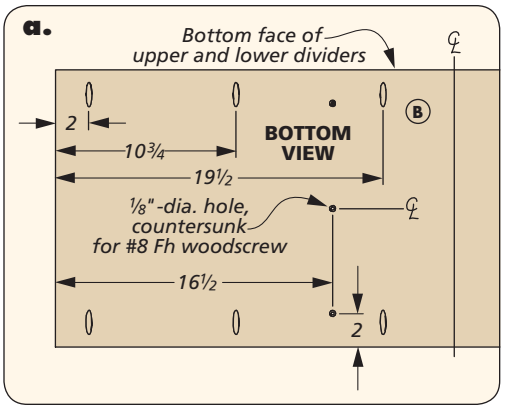

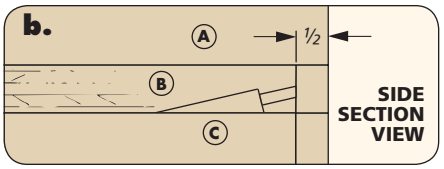

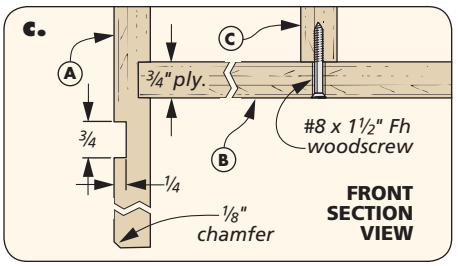

Build the BASE CABINET

Construction of the hutch begins with the base cabinet. Its main framework is made up of sides along with upper, lower, and vertical dividers cut from cherry plywood. The sides and upper and lower dividers can be cut to size now. Note that the sides are 1" wider than the other parts. This allows them to accept the back assembly and face frame later on.

DADOES & DRILL. The rest of the machining steps before assembling the cabinet are pretty simple. You'll set up a dado blade to cut a series of dadoes in the sides: Two on the inside face and one on the outside face of each. Then drill holes for shelf pins in the sides as shown.

You'll also drill countersunk holes in the upper and lower divider that are used to secure the vertical divider with screws (detail 'c'). Finally, drill a series of pocket holes on the bottom faces of the upper and lower dividers (detail 'a'). Later on, you'll drive pocket screws through these to attach the back and face frame.

CABINET ASSEMBLY. Glue and clamps take care of joining the cabinet sides to the upper and lower dividers. Just make sure to maintain the ½" spacing at the front and back (detail 'b'). Finally, cut the vertical divider to size and drill shelf pin holes. (These holes go all the way through the panel.) Position the divider, drill pilot holes into the panel ends through the countersinks, and secure it with screws.

FACE FRAME. As you can see in the drawings at left, the cabinet face frame components are joined with pocket screws. This simplifies assembly, but there are a few considerations to make as you start to put it all together.

I started by cutting the outer stiles to size, and rabbeting the outside edges (detail 'b'). That way, I could clamp the stiles to the cabinet and measure between them to size the three rails.

After cutting the rails and the upper and lower stiles to size, I cut the taper on the bottom of the outer stiles at the band saw (detail 'a'). Then I cut the centered groove in the lower rail, and the matching dadoes in the outer stiles. Make sure these line up with the dadoes in the cabinet sides.

The next steps involve drilling pocket holes and assembling

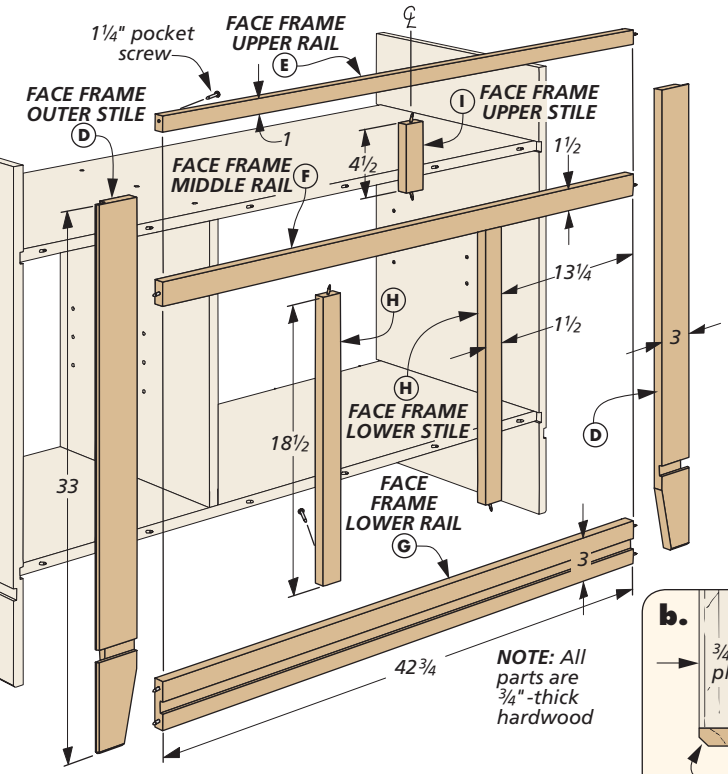

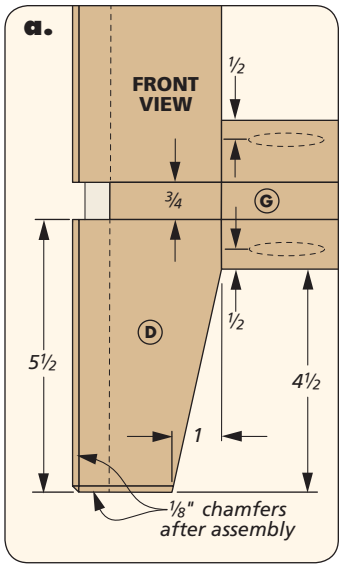

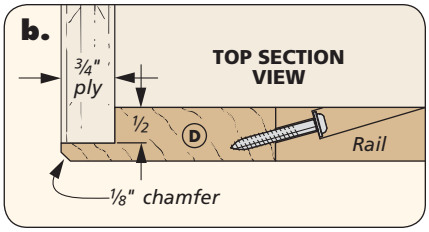

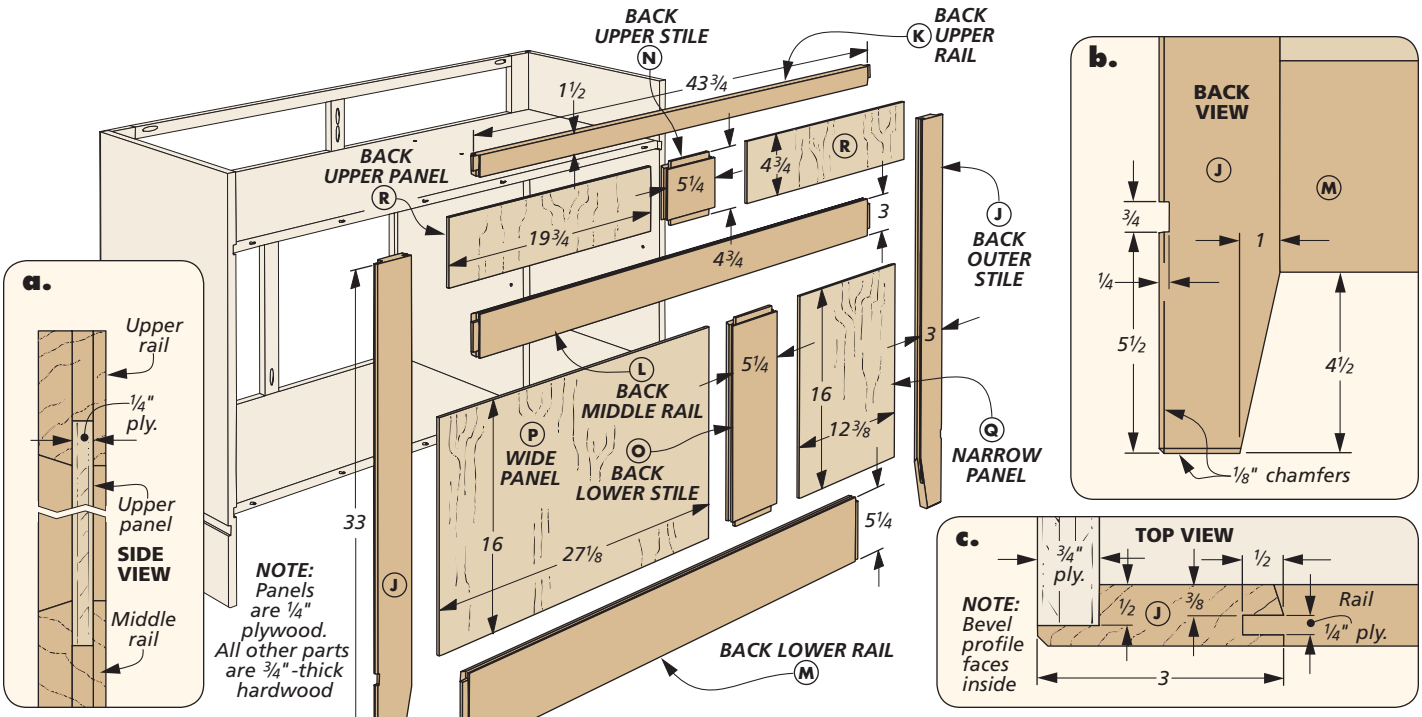

the face frame. This is pretty straightforward, although I did use a few spacers sized to match the openings in the frame as I screwed it together. In addition, I cut two "keys" and put them in place in the groove in the lower rail and the dadoes in the outer stiles to ensure they'd line up with one another (refer to Shop Notes on page 65). Once the assembly was complete, I routed a slight chamfer on the outside edges and bottom ends of the outer stiles. Then I glued and clamped it to the cabinet and drove in pocket screws to secure it.

BACK ASSEMBLY. The cabinet back is a frame and panel assembly designed to look great when the cabinet doors are open. It's made of solid cherry rails and stiles with ¼" plywood panels.

Like the face frame, start by cutting the outer stiles to size and rabbeting the edges (detail 'c'). Clamp them in place and measure for the three rails, accounting for the stub tenons added to the ends of the rails. Then cut the rails and other stiles to size.

COPE & STICK. The back assembly is joined with cope and stick joinery. This joinery is formed using a pair of bits at the router table. The box below gives you the basic overview of the process. It's valuable to make some test cuts first with both bits until you get the settings just right.

You'll want to set up the coping bit first to cut the tenons on the ends of the rails and the upper and lower stiles (refer to the left drawing below). After that, use a rail to set the sticking bit for cutting the grooves and bevels in all the parts (right drawing). Note that the middle rail and upper and lower stiles receive grooves along both edges.

COMPLETE THE BACK. As with the face frame, you'll cut a taper on the outer stiles and rout a chamfer on the edges. There's also a small notch to accept the bullnose molding (detail 'b'). After cutting the plywood panels to size, assemble the back with glue and clamps. Then all that's left is to glue and clamp the assembly to the back of the cabinet, and drive in the pocket screws to lock it in place.

How-To: COPE & STICK JOINERY

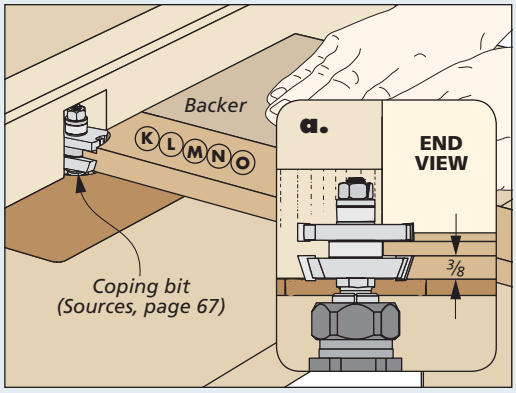

Coping Bit. Use the coping bit to cut the ends of the rails and upper and lower stiles. A backer holds the pieces square as you cut them.

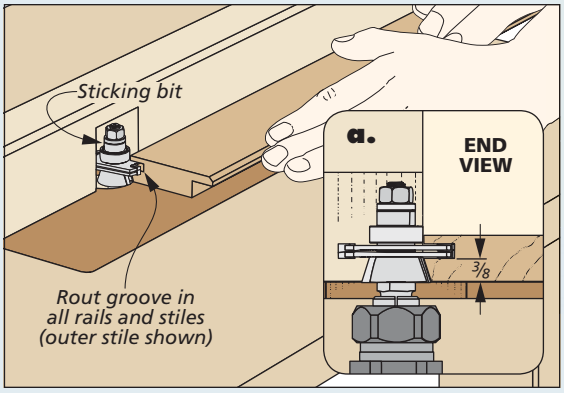

Sticking Bit. After setting the height of the sticking bit to cut a mating groove, rout the groove and bevel on the edges of all the parts with the bit.

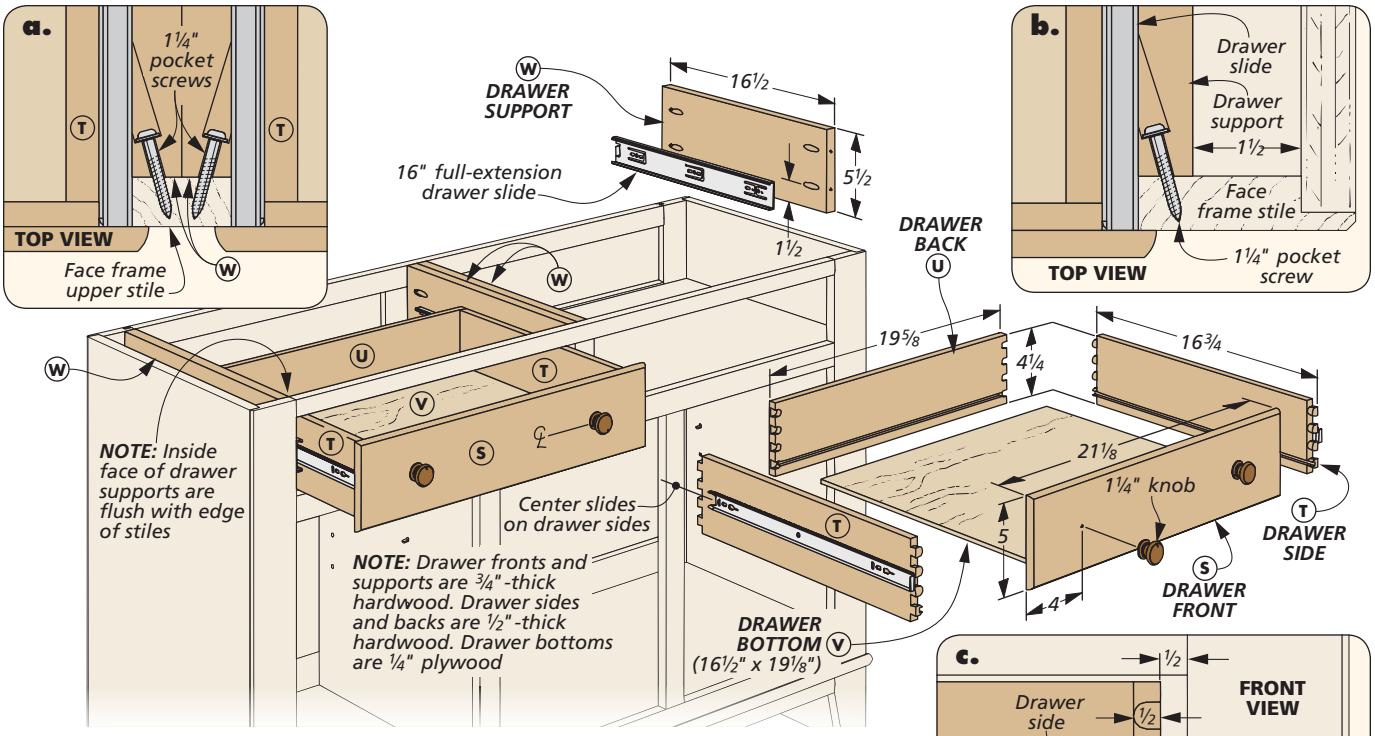

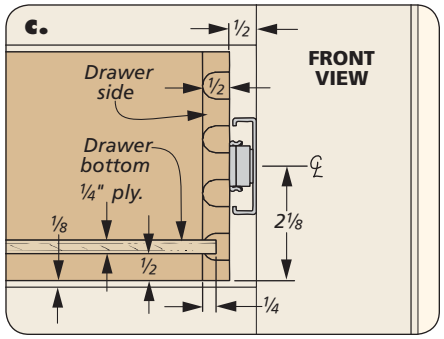

Add the DRAWERS & TOP

With the basic cabinet complete, you can set about adding some of the details that finish it out. And that starts with two drawers that fill the openings at the top of the cabinet.

DOVETAILED DRAWERS. As shown in the drawings above, the drawers are assembled using half-blind dovetail joints. These joints are an easy task using a dovetail jig and a router. But there's an added wrinkle to the process with these drawers. As shown in the drawing below, the drawer front has a lip around it, and then the dovetail pins are cut behind this lip. This makes the setup different, but it's not an uncommon task for a dovetail jig.

The first step, of course, is cutting the drawer fronts from cherry and the backs and sides from maple. They're sized to accommodate the sides and create a small gap above and below the drawers. Then you'll want to rabbet the perimeter of the drawer front to form the lip, as indicated in the lower left drawing.

After that, it's a matter of cutting the dovetail joints using your jig. The jig's manual should walk you through the process of routing the dovetails. Once you've achieved a nice, clean fit between the drawer parts, cut a groove near the bottom edge of all the parts to hold the drawer bottoms (lower middle drawing). The groove is located on a tail on the sides, so it's hidden once the drawers are assembled. While you're at it, set up a roundover bit in the router table, as shown in the lower right drawing and rout the decorative "half-bullnose" around the perimeter of the drawer fronts, as well.

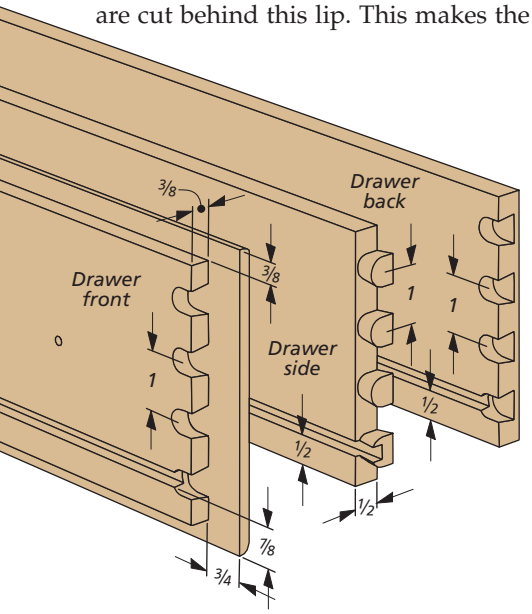

How-To: SHAPE THE DRAWER FRONTS

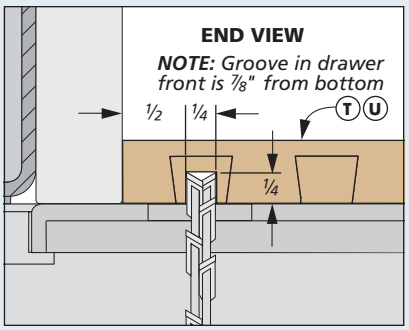

Groove for Bottom. After cutting the dovetails, set up a dado blade to cut a groove in all the drawer parts.

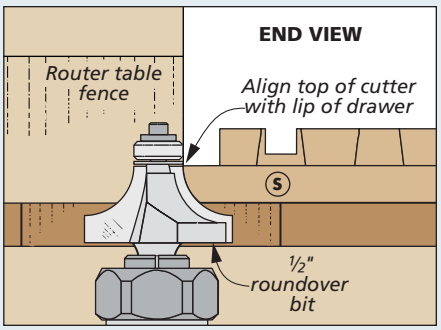

Half-Bullnose. Form the profile on the drawer front by routing with a roundover bit around the perimeter.

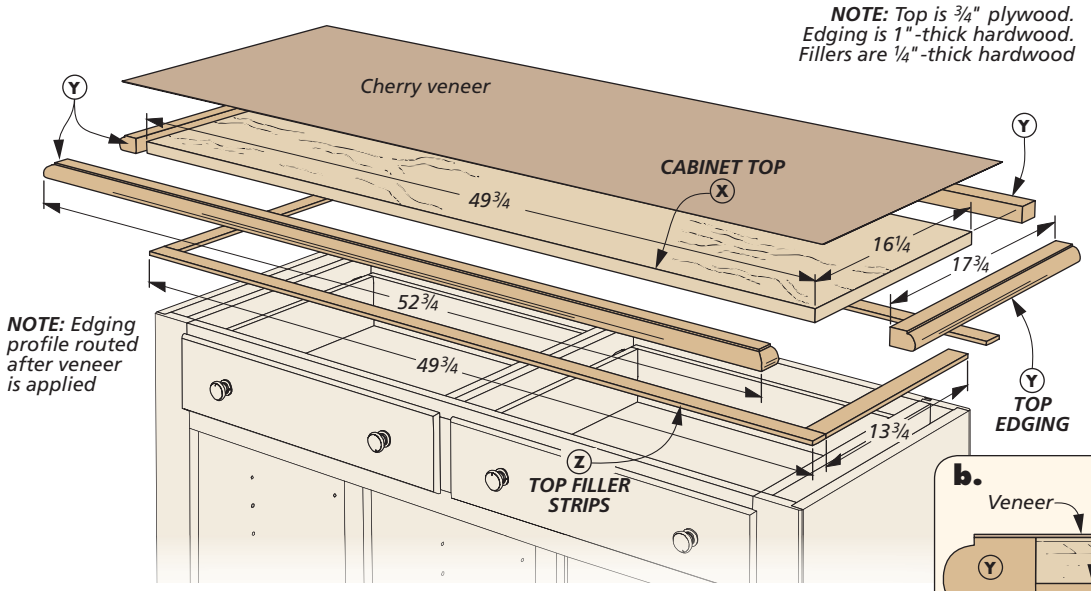

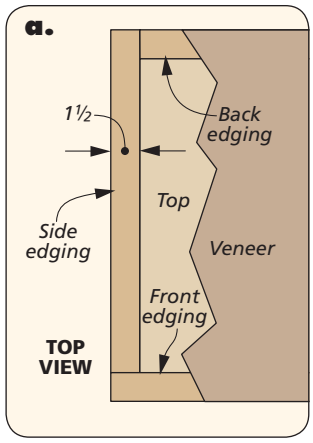

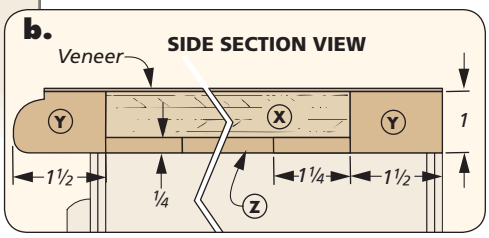

After the bottom panels have been cut to final size from plywood, you'll be ready to assemble the two drawers.

INSTALLING THE DRAWERS. To allow the drawers to slide in and out of the cabinet, I needed to add four drawer supports. These are nothing more than pieces that are cut to size and installed at the top of the cabinet with pocket screws (details 'a' and 'b,' opposite page). After that, it's time to install the drawers using full-extension drawer slides. See page 18 for a helpful article on installing them.

CABINET TOP. With the drawers in place, it's time to close off the top of the cabinet with a top panel. It's simply a plywood panel with decorative veneer on top and profiled edging strips glued around it.

There are a couple of interesting things that I want to point out about the top before you get started. For one, you'll note that the veneer is actually applied over the edging strips, and then the profile is routed on both the edging and the veneer. This creates a seamless look between the edging and veneer. Also, the edging is thicker than the top panel that it's glued around. This gives the top a beefier appearance that looks great in the finished project. However, I also needed the top to sit flat against the cabinet, so I added thin filler strips to make sure the edging sat flush with the cabinet's top edges.

MAKING THE TOP. Despite all this, making the top assembly isn't difficult. Start by cutting the top panel to size, then cut and glue the edging strips around it (detail 'a'). Next, plane down some stock for filler strips to rest flush with the edging on the underside of the top panel. Finally, cut and glue these strips to the underside of the top (detail 'b').

Now it's time to add the veneer. I used a paper-backed veneer (page 67), which is easy to apply. You simply cut the veneer sheet slightly oversize, and then apply it using contact adhesive and a roller. Roll from the center out to smooth and adhere the veneer to the panel below it.

Once the adhesive has dried, a simple routing sequence will complete the top assembly. The sequence starts with trimming the veneer flush with the edging using a flush-trim bit.

The other two routing steps are shown in the box below. First, position the top assembly face up, and rout around the sides and front with a ½" roundover bit. Then flip the top over, and use a ¼" roundover bit to complete the profile.

With the top assembly complete, you can position it above the cabinet and attach it using glue and clamps.

How-To: VENEER & ROUT THE TOP

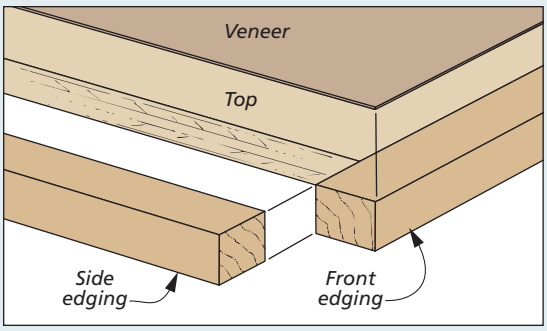

Edging & Veneer. After gluing on the edging strips, cut a veneer sheet to rough size and adhere it to the top panel using contact adhesive.

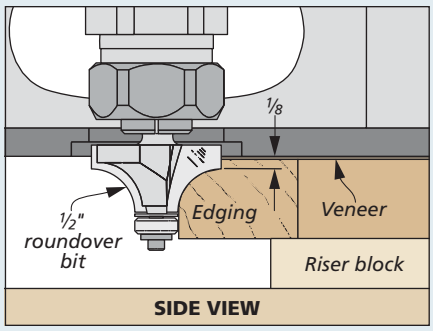

Top Profile. With the top facing up, rout the sides, and then the front edge, using a ½" roundover bit in a hand-held router.

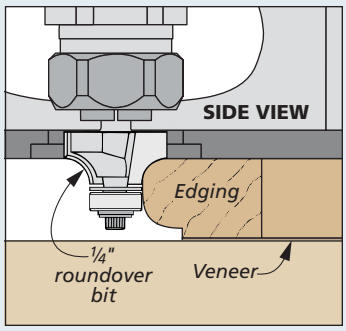

Bottom Profile. Flip the top panel over and complete the profile with a ¼" roundover bit.

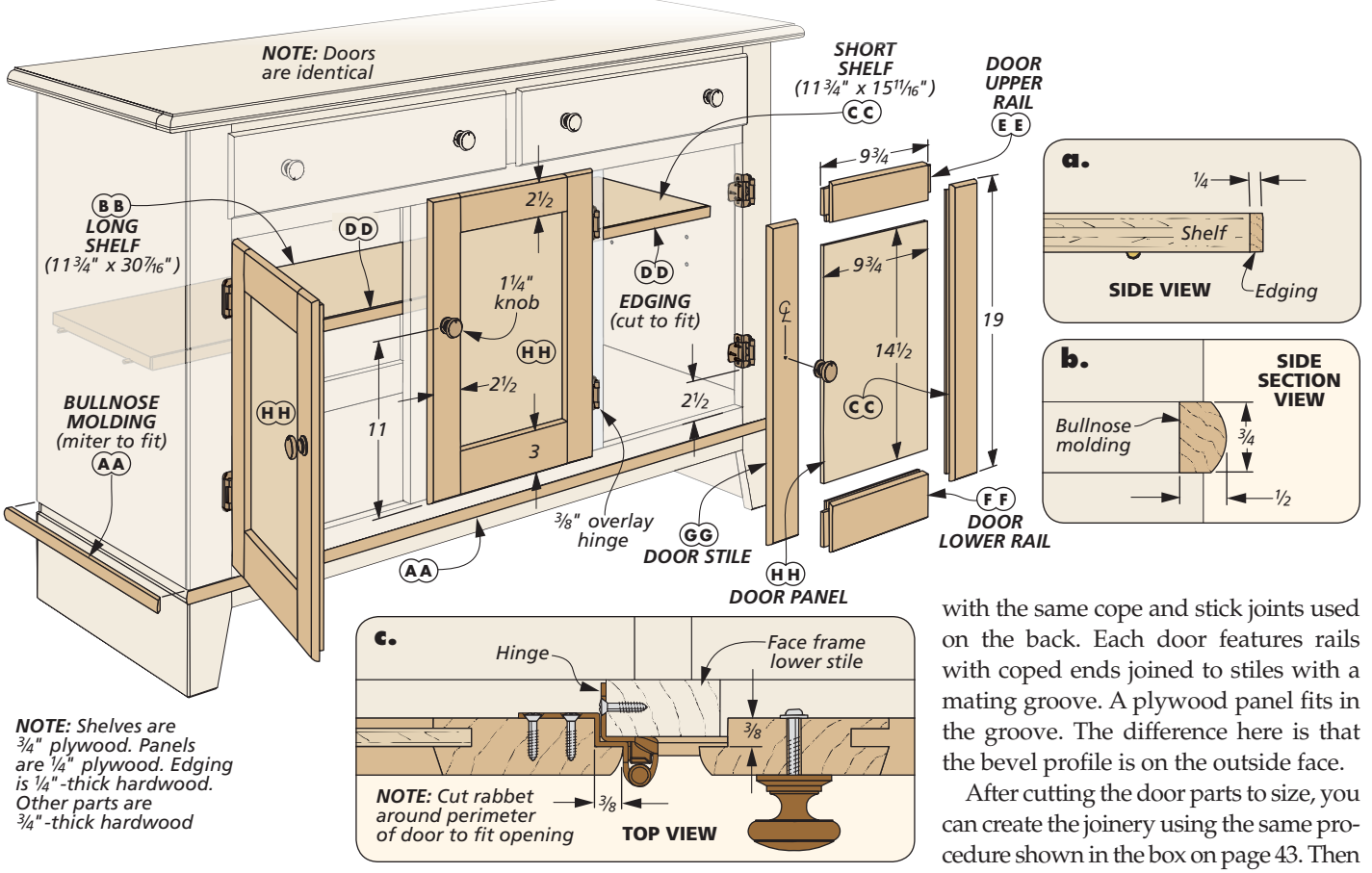

NOTE: Shelves are ¾" plywood. Panels are ¼" plywood. Edging is ¼"-thick hardwood. Other parts are ¾"-thick hardwood

Install the DOORS & SHELVES

You're just about finished with the base cabinet. The mating dadoes and grooves near the bottom of the cabinet are filled with decorative strips of hardwood molding. The molding features a bullnose profile on the outside edge.

To make the molding, you'll want to thickness stock to fit the dadoes and grooves, and then cut some blanks that are extra-wide and extra-long. The next step is to head to the router table, where you'll rout both edges to form the bullnose profile (refer to the lower left drawing). After that, simply rip the molding strips to width. Measure and miter the molding strips to fit around the cabinet, as shown in the main drawing.

SHELVES. Perhaps the simplest parts of this cabinet to make are the two shelves. That's because they're nothing more than pieces of plywood with solid-wood edging strips glued to the front. They sit inside the cabinet on shelf supports.

DOORS. After building the cabinet back assembly, the three cabinet doors should be familiar territory. They're assembled with the same cope and stick joints used on the back. Each door features rails with coped ends joined to stiles with a mating groove. A plywood panel fits in the groove. The difference here is that the bevel profile is on the outside face.

After cutting the door parts to size, you can create the joinery using the same procedure shown in the box on page 43. Then assemble the doors with glue and clamps.

The last cuts to make on the doors are rabbets along the back edges to fit the openings in the face frame and a rounded profile on the front. These steps are shown in the lower left and middle drawings below. Then you're ready to mount the doors into the face frame on no-mortise overlay hinges (refer to detail 'c' above).

FINISHING TOUCHES. At this point, you're just about ready to turn your attention to the hutch's upper cabinet. But you can take some time now to apply stain and finish to the components of the base cabinet. You'll find all the finishing information you need on page 67.

How-To: CUT THE DOORS & BEAD MOLDING

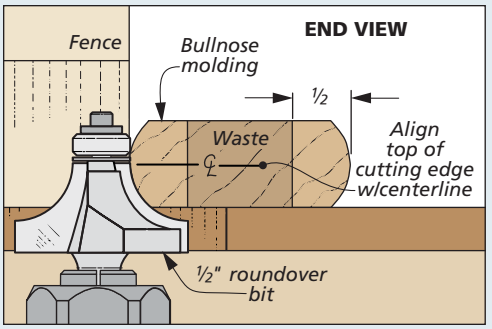

Bullnose. Two passes along the bullnose molding blank take care of the profile.

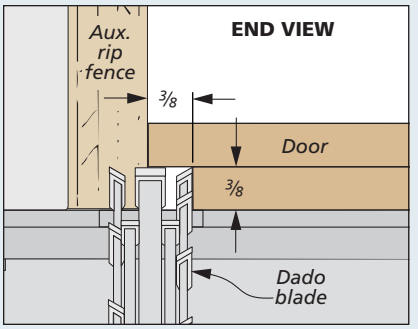

Rabbet. Rabbet the door with a dado blade buried in an auxiliary fence.

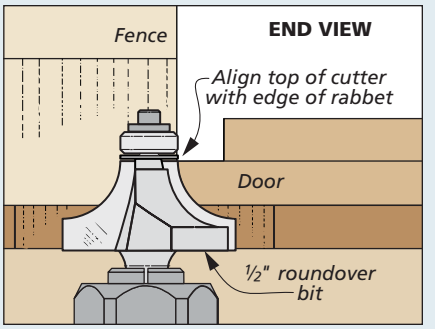

Profile. Use a roundover bit at the router table to rout the door front.

Materials, Supplies & Cutting Diagram for Base Cabinet

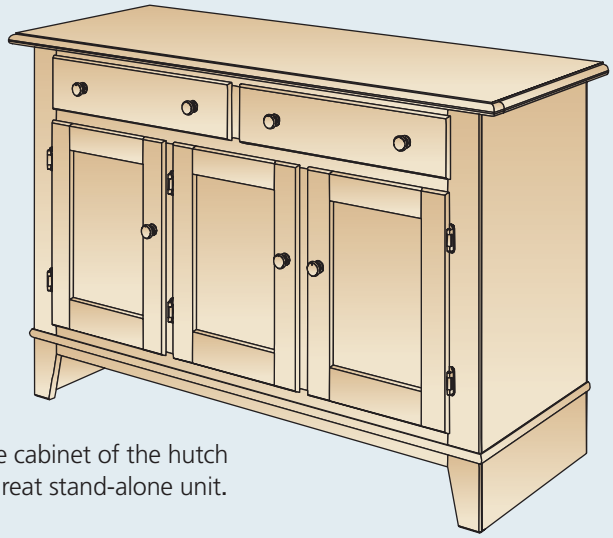

Base. The base cabinet of the hutch also makes a great stand-alone unit.

A Base Cabinet Sides (2) 3/4 ply. - 17 1/2 x 33
B Upr./Lwr. Dividers (2) 3/4 ply. - 16 1/2 x 47 3/4
C Vertical Divider (1) 3/4 ply. - 16 1/2 x 19 1/4
D Face Frame Outer Stiles (2) 3/4 x 3 - 33
E Face Frame Upper Rail (1) 3/4 x 1 - 42 3/4
F Face Frame Mid Rail (1) 3/4 x 1 1/2 - 42 3/4
G Face Frame Lower Rail (1) 3/4 x 3 - 42 3/4
H Face Frame Lower Stiles (2) 3/4 x 1 1/2 - 18 1/2
I Face Frame Upper Stile (1) 3/4 x 1 1/2 - 4 1/2
J Back Outer Stiles (2) 3/4 x 3 - 33
K Back Upper Rail (1) 3/4 x 1 1/2 - 43 3/4
L Back Middle Rail (1) 3/4 x 3 - 43 3/4
M Back Lower Rail (1) 3/4 x 5 1/4 - 43 3/4
N Back Upper Stile (1) 3/4 x 5 1/4 - 4 3/4
O Back Lower Stile (1) 3/4 x 5 1/4 - 16
P Wide Lower Panel (1) 1/4 ply. - 27 1/8 x 16
Q Narrow Lower Panel (1) 1/4 ply. - 12 3/8 x 16
R Upper Panels (2) 1/4 ply. - 19 3/4 x 4 3/4
S Drawer Fronts (2) 3/4 x 5 - 21 1/8
T Drawer Sides (4) 1/2 x 4 1/4 - 16 3/4
U Drawer Backs (2) 1/2 x 4 1/4 - 19 5/8
V Drawer Bottoms (2) 1/4 ply. - 16 1/2 x 19 1/8
W Drawer Supports (4) 3/4 x 5 1/2 - 16 1/2

X Cabinet Top (1) 3/4 ply. - 16 1/4 x 49 3/4
Y Top Edging 1 x 1 1/2 - 150 rgh.
Z Top Filler Strips 1/4 x 1 1/4 - 140 rgh.
AA Bullnose Molding 3/4 x 1/2 - 90 rgh.
BB Long Shelf (1) 3/4 ply. - 11 3/4 x 30 7/16
CC Short Shelf (1) 3/4 ply. - 11 3/4 x 15 11/16
DD Shelf Edging 1/4 x 3/4 - 50 rgh.
EE Door Upper Rails (3) 3/4 x 2 1/2 - 9 3/4
FF Door Lower Rails (3) 3/4 x 3 - 9 3/4
GG Door Stiles (6) 3/4 x 2 1/2 - 19
HH Door Panels (3) 1/4 ply. - 9 3/4 x 14 1/2

- (6) #8 x 1 1/2"Fh Woodscrews
- (54) 1 1/4" Pocket Screws
- (2 prs.) 16" Full-Extension Drawer Slides
- (7) 1 1/4" Antique Brass Knobs
- (3 prs.) 3/8" Overlay Hinges
- (8) 1/4" Shelf Supports
- (1) 24" x 96" Sheet Paper-Backed Veneer

3/4" x 7 1/2" - 84" Cherry (4.4 Bd. Ft.)

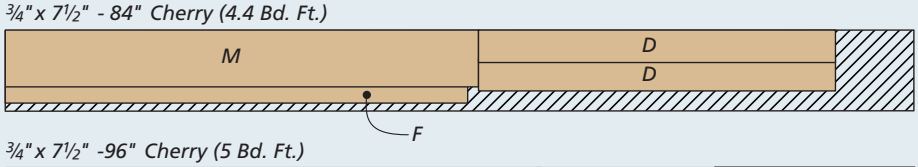

3/4" x 7 1/2" -96" Cherry (5 Bd. Ft.)

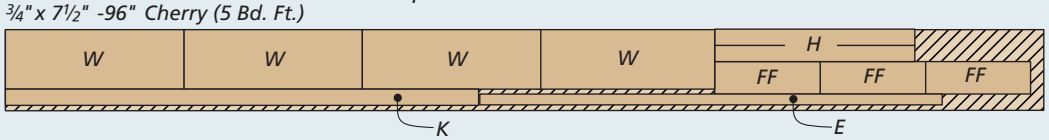

ALSO NEEDED: *One 48" x 96" Sheet of 3/4" Cherry Plywood, One 48" x 48" Sheet of 3/4" Cherry Plywood, and One 48" x 96" Sheet of 1/4" Cherry Plywood*

3/4" x 6 1/2" - 96" Cherry (4.5 Bd. Ft.)

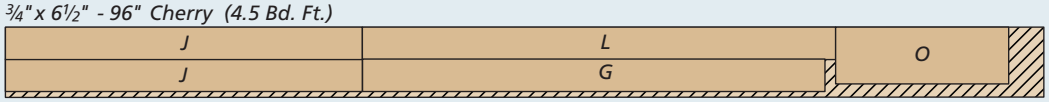

3/4" x 7 1/2" - 96" Cherry (5 Bd. Ft.)

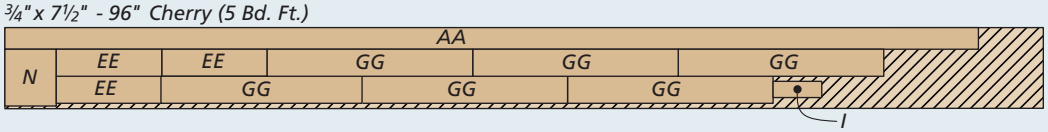

3/4" x 5 1/2" - 48" Cherry (1.8 Bd. Ft.)

1/4" x 4" - 72" Cherry (2 Sq. Ft.)

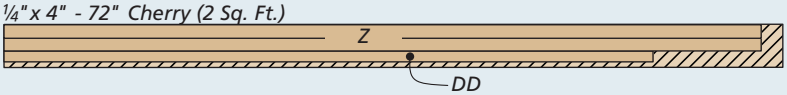

1/2" x 5" - 48" Hard Maple (1.7 Sq. Ft.)

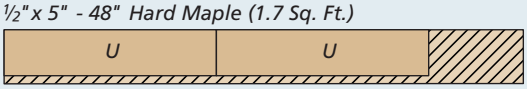

1/2" x 5" - 72" Hard Maple (2.5 Sq. Ft.)

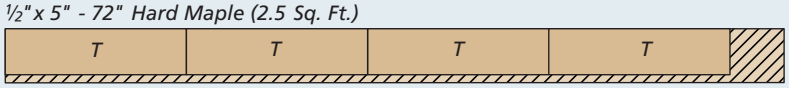

1" x 4" - 84" Cherry (3 Bd. Ft.)

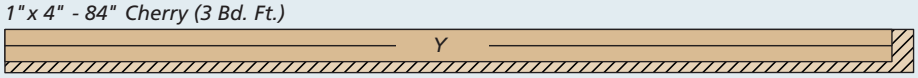

Assemble the UPPER CABINET

Since the hutch's upper cabinet is enclosed by glass on three sides, it's built a little differently than the base cabinet. However, it does share many similar features that I'll point out as the construction process unfolds.

Like the base cabinet, the upper cabinet is enclosed on the top and bottom with ¾" plywood. But the sides are frame and panel assemblies with glass panels.

TOP & BOTTOM PANELS. As before, you can start by cutting the plywood top and bottom to size. Then drill pocket holes on the top face of the top panel and the bottom face of the bottom panel, as well as three larger holes for puck lights in the top panel (detail 'b'). Next up is sizing the rails and stiles that will form the side assemblies.

SIDE ASSEMBLIES. By now, you're probably familiar with the joinery used to connect these rails and stiles to one another. They're made with the same cope and stick router bits that are shown on page 43. So you'll set up and rout the ends of the rails and the edges of all the parts just as you did for the base cabinet back assembly and doors. After that, the sides are ready to assemble.

The base cabinet back and doors feature plywood panels captured in the grooves of the rails and stiles. Here, however, you'll need to add glass to openings in the frames. And that requires a rabbet to fit the glass. This is easy to accomplish with a rabbeting bit, as shown in the lower left drawings. As you rout around the perimeter of the frame, you'll end up with rounded corners, but it's easy to square these up using a sharp chisel (lower right drawing).

ASSEMBLE THE CASE. You won't be adding the glass to the frames until later on in the project, so now's the time to join the top and bottom panels to the side assemblies. Note that the sides overhang the panels by a ½" at the front and back, as well as the bottom. You can use spacers to position all the panels properly before you glue and clamp them together. Then drive in pocket screws to lock the sides tightly to the top and bottom panels.

FACE FRAME. At this stage, things will start to seem a little more familiar when

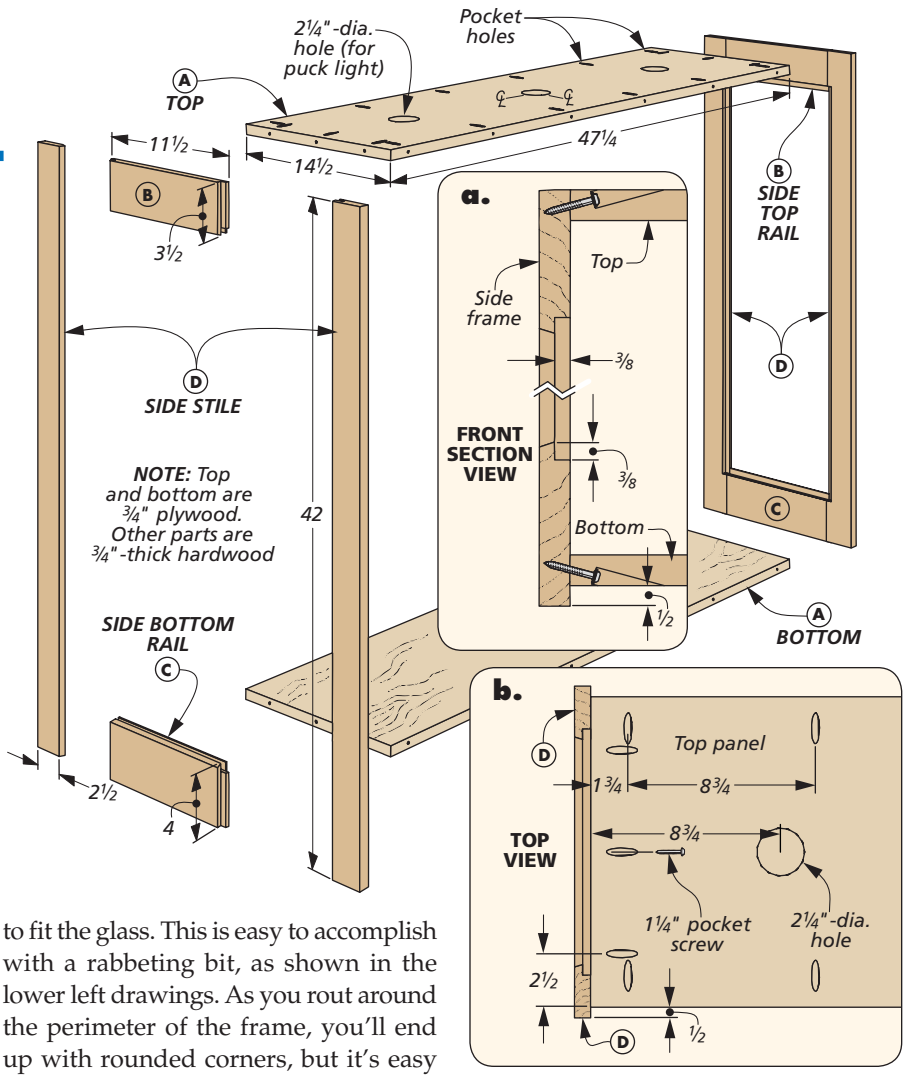

How-To: RABBET THE FRAMES

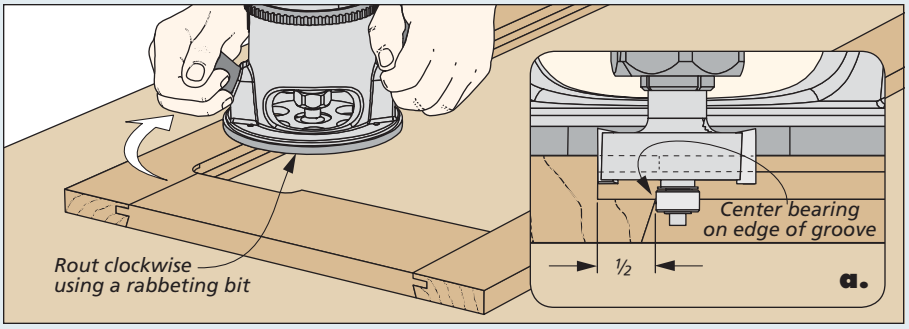

Rabbet. After gluing up the side assemblies, you'll need to rabbet the frame to accept panes of glass later on. This is easiest to accomplish with a hand-held router equipped with a rabbeting bit. Set the bearing to run along the inside edge of the frame.

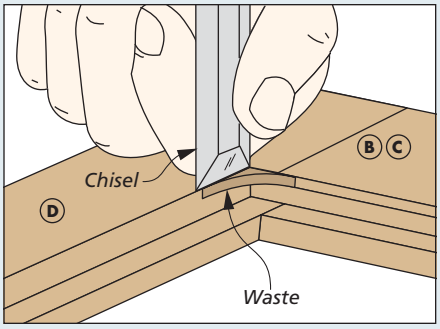

Chisel. After the rabbet is complete, use a sharp chisel to pare the rounded corners of the frame square.

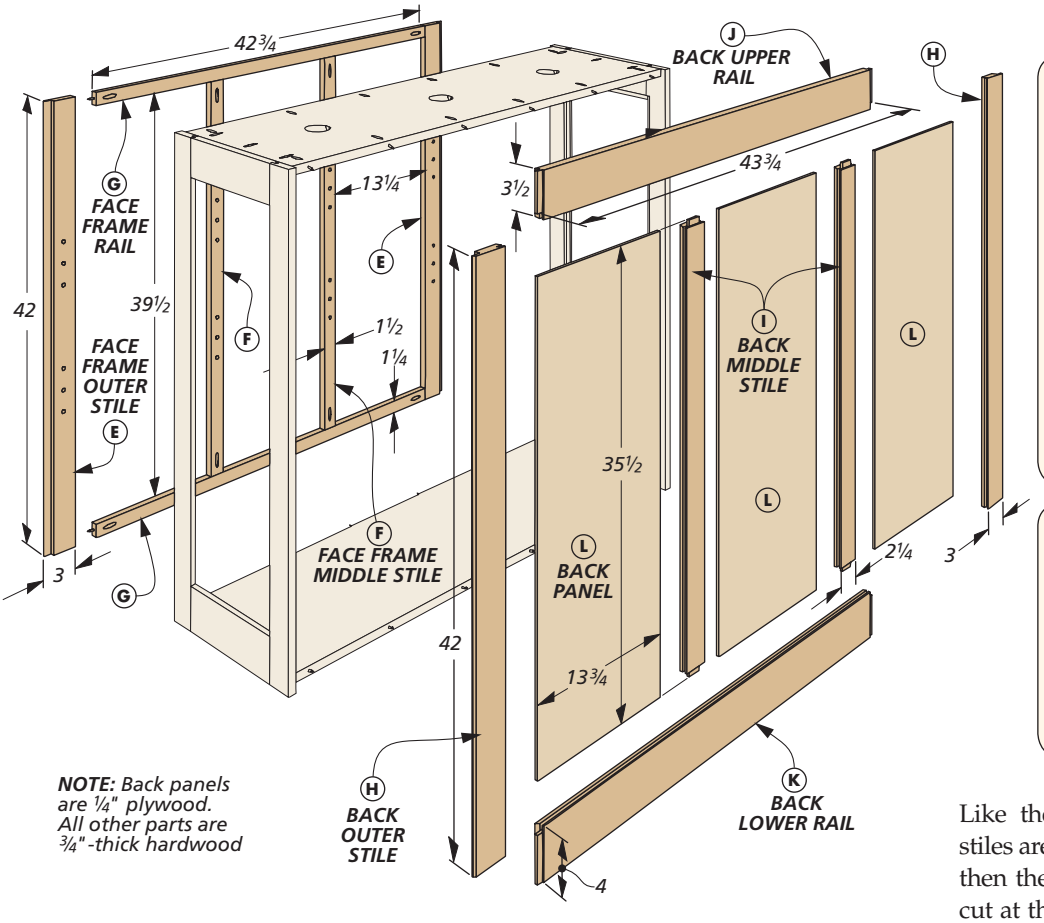

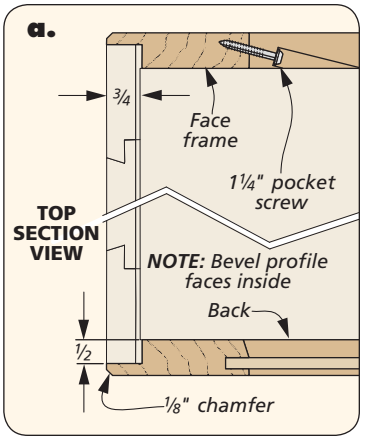

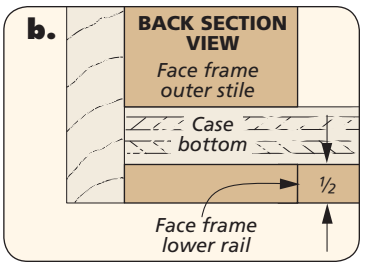

compared to the base cabinet. That's because the face frame is composed of a series of rails and stiles assembled with pocket screws, just like the base cabinet face frame.

In fact, as you can see in the drawing above, this frame is simpler, with two outer stiles, two rails, and two inner stiles. You'll want to rabbet the outside edges of the outer stiles first, just as before. Then measure between them to determine the length of the other parts, cut them to size, and join the entire assembly together using glue and pocket screws.

BACK ASSEMBLY. The back assembly should also be looking familiar at this point — rails and stiles joined with cope and stick joinery that surround plywood panels. Like the base cabinet back, the outer stiles are rabbeted on the edges first, and then the joints in the rails and stiles are cut at the router table (refer to page 43). The plywood panels are simply cut to size to fit between the grooves in the rails and stiles. The sides are also chamfered just like before (detail 'a').

ENCLOSE THE CABINET. With both the face frame and the back assembled, it's time to add them to the cabinet. The rabbets at the edges of the two assemblies should fit right over the sides with glue and clamps holding them in place. Finally, drive pocket screws through the top and and bottom panels and into the face frame and back rails to really lock the whole assembly together.

SHELF SUPPORT HOLES. If you look at the drawings above, you may notice one detail that I left out that usually would have been taken care of by this point. And that's the shelf support holes. This time, because of the glass on the cabinet sides, I drilled the holes in the stiles of the face frame and back assembly.

I also waited until after assembly to drill all the holes. That's because it was easier to ensure alignment between each set of holes by using a hardboard template rather than the drill press, as shown in the box on the left. After drilling all the holes, I installed shelf support sleeves in each of them to create a nice look since these holes are much more visible.

How-To: DRILL SHELF SUPPORT HOLES

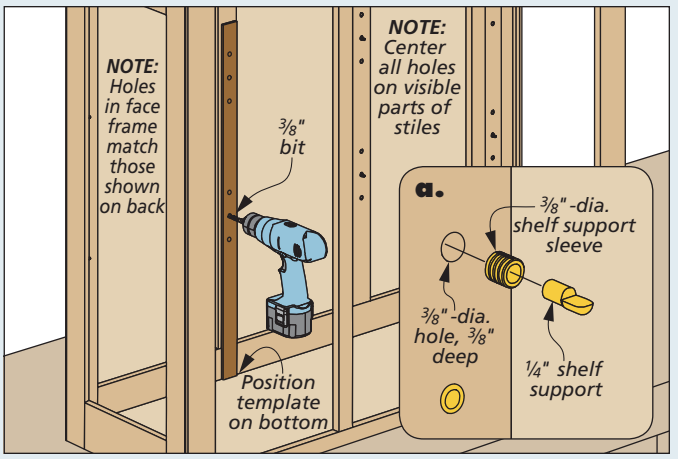

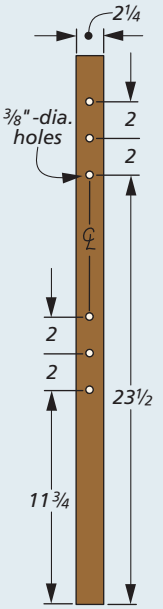

Drill for Shelf Supports. To drill the shelf support holes in the face frame and back stiles, I used a template and a hand drill. The shelf support sleeves are press-fit into the holes.

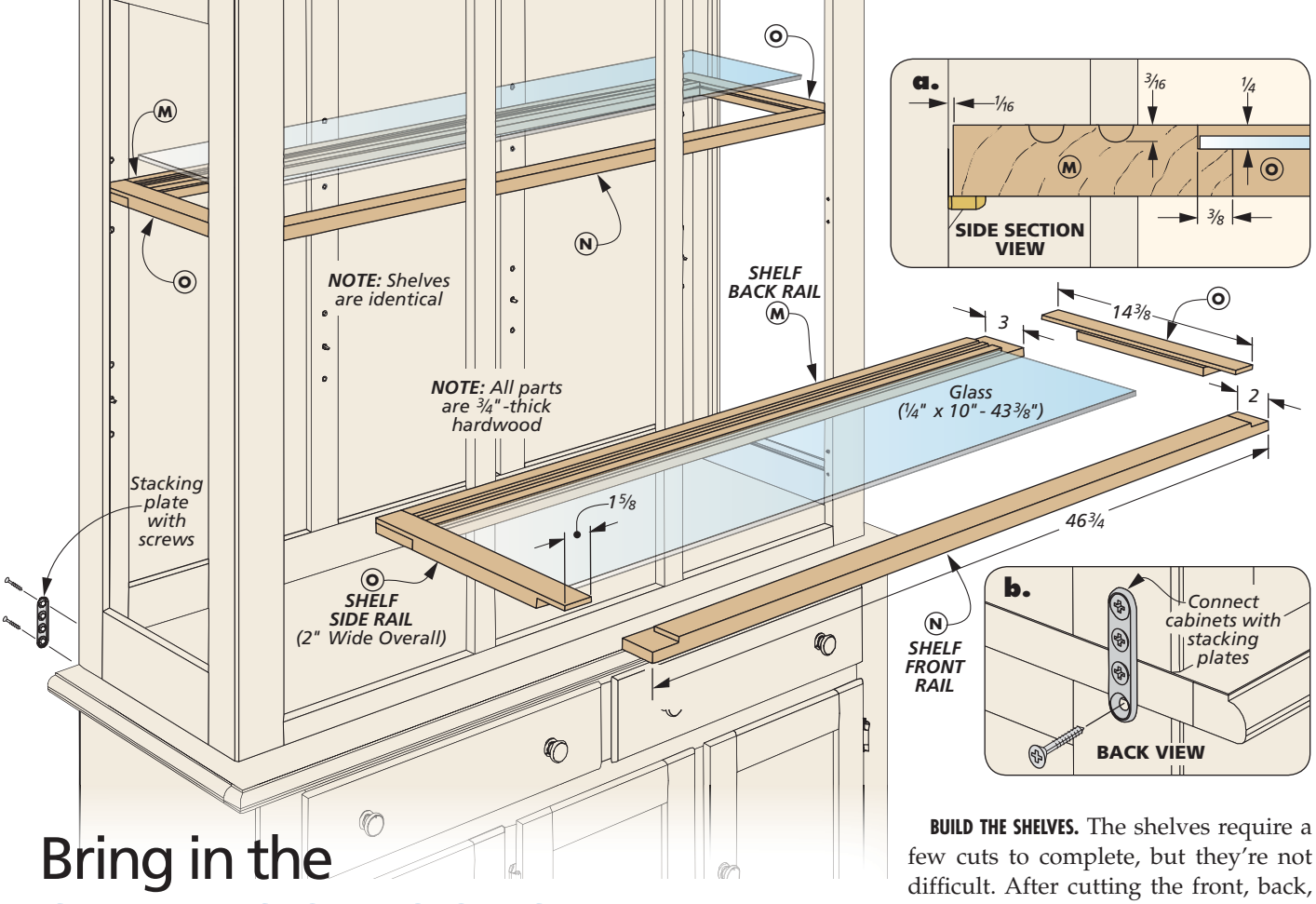

Bring in the SHELVES & DOORS

With the basic framework of the upper cabinet complete, the shelves are the next order of business. And since the upper cabinet is a decorative space to display fine dinnerware, it needs a little different treatment for the shelves than just simple plywood panels with hardwood edging strips.

GLASS SHELVES. The solution I arrived at is shelves with glass panels surrounded by wood rails on all sides. The glass allows the light from the top to filter down through the entire cabinet.

How-To: BUILD SHELVES

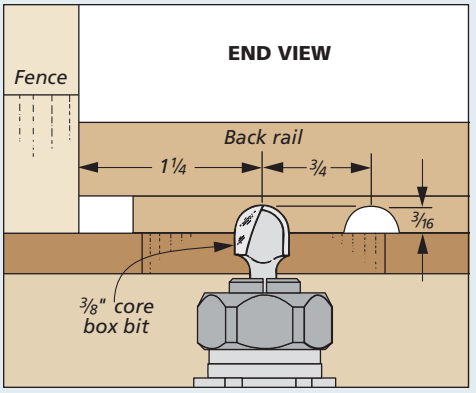

Coves. The shelf back rail is transformed into a plate rail by routing two coves with a core box bit at the router table.

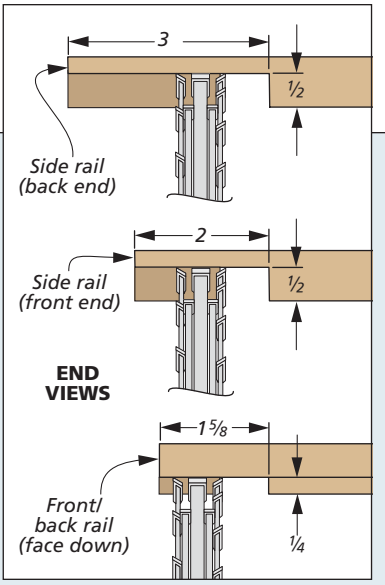

Laps. A dado blade handles the lap joints. Cut the shoulders first and work toward the ends.

BUILD THE SHELVES. The shelves require a few cuts to complete, but they're not difficult. After cutting the front, back, and side rails for each shelf to size, the first order of business is to cut a rabbet along the inside edge of each rail to hold the glass. This was easy to accomplish by burying a dado blade in an auxiliary rip fence. The dimensions are shown in detail 'a' above.

Next up, you can move to the router table to transform the back rails into decorative plate rails for displaying plates. To do this, you'll use a core box bit, as shown in the far left drawing. Carefully reset the router table fence after cutting a groove on each back rail.

Finally, you'll cut the lap joints on the ends of the rails in order to join them together. These are shown in the drawings, near left. The laps on the side rails are cut to the same depth as each other, but the lap on the back is wider than the one on the front to accommodate the plate rail (refer to the top two drawings). Then you can lower the blade to cut the mating lap on the front and back rails (lower drawing). In all cases, make some test cuts until you get it just right. Then the shelf frames can be assembled and set aside for now.

UPPER CABINET DOORS. Cope and stick joinery is a common theme throughout this dining room hutch project. (You'll find

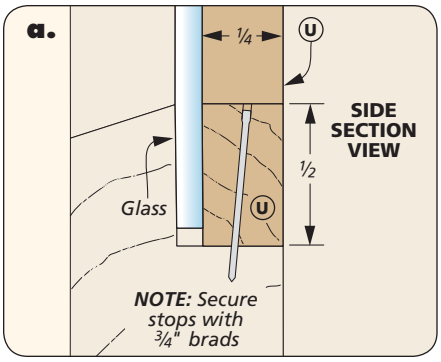

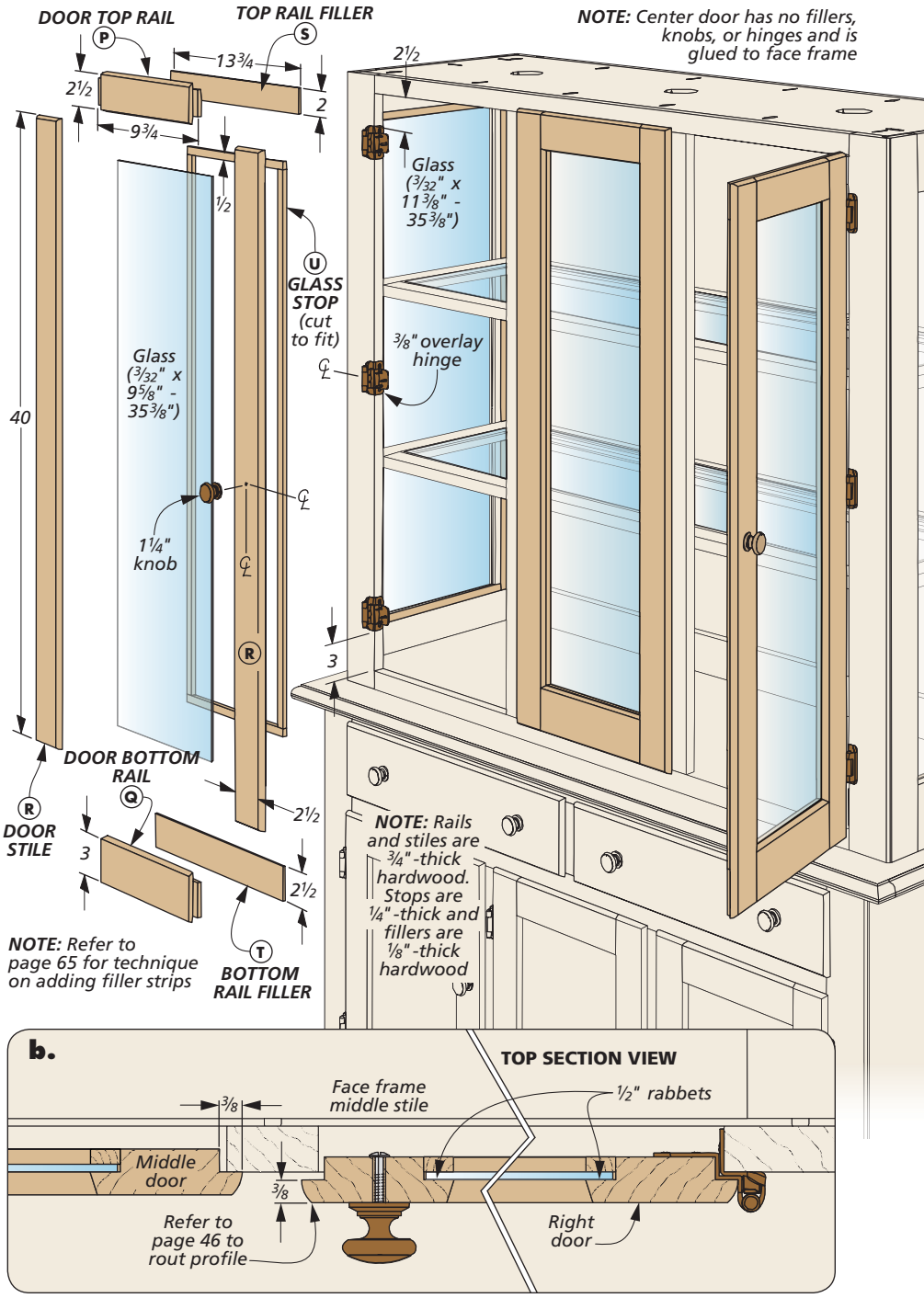

the basic overview on page 43.) And the upper cabinet doors are the last component of the hutch that uses this joinery method. After cutting the rails and stiles for the three doors, you'll complete the joinery just as before — routing the stub tenon on the ends of the stiles, and then cutting a mating groove in all four parts. Then join the frames together.

These doors have glass panels just like the cabinet sides, so the next steps involve rabbeting the back of the frame to accommodate the glass. You'll find the details for doing this in the drawings at the bottom of page 48.

REINFORCED DOORS. I wanted to add a little strength to the two outer doors to support the glass panels. So I added another detail to reinforce the doors. As you can see in the drawing above, I glued on filler strips that cover both the rails and the ends of the stiles at the top and bottom of each door. The result is a much stronger door. You can find the full instruction for building these reinforced doors in Shop Notes on page 65.

COMPLETING THE DOORS. Like the doors on the base cabinet, these doors are partially overlaid in the openings in the face frame. This involves cutting a rabbet around the outside edges of each door frame, as well. For this cut, simply use a dado blade buried in an auxiliary rip fence at the table saw. The dimensions are shown in detail 'b.'

Finally, there's a rounded profile on the outside edges of each door, too. It's easy to cut this profile as shown in the lower middle drawing on page 46.

The middle door of the cabinet is fixed in place in the face frame. So you can glue and clamp it into position now, before adding the glass.

GLASS & HARDWARE. You're almost ready to put all the components of the upper cabinet together. Now's a good time to obtain the glass for the cabinet sides, the doors, and the shelves. Before installing the glass, separate the two cabinets and then stain and finish all the components of the upper cabinet (Sources on page 67).

The glass in the shelves simply rests in the rabbets once the frames are in place, but it's secured in the doors and sides with thin strips of glass stop. You can cut these to size, stain and finish them, and secure them carefully behind the glass with small brads (detail 'a').

The two outer doors feature a small knob that's the same as the doors on the base cabinet. And the hinges are the same, too — no-mortise hinges that are specifically designed for doors with a ⅜" overlay. As you get ready to install them, just be sure that the outer doors are aligned with the middle, fixed door.

STACKING PLATES. With both cabinets stained and finished, you can set the upper cabinet above the base cabinet to check your progress. I used the stacking plates that are shown in detail 'b' on the previous page to connect them.

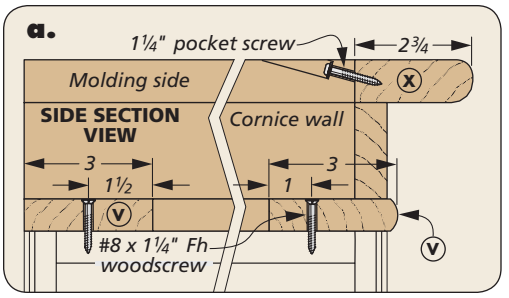

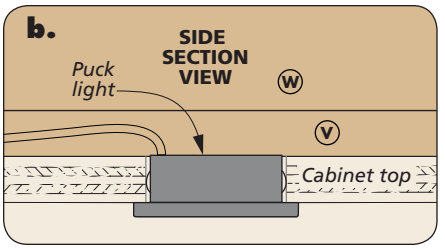

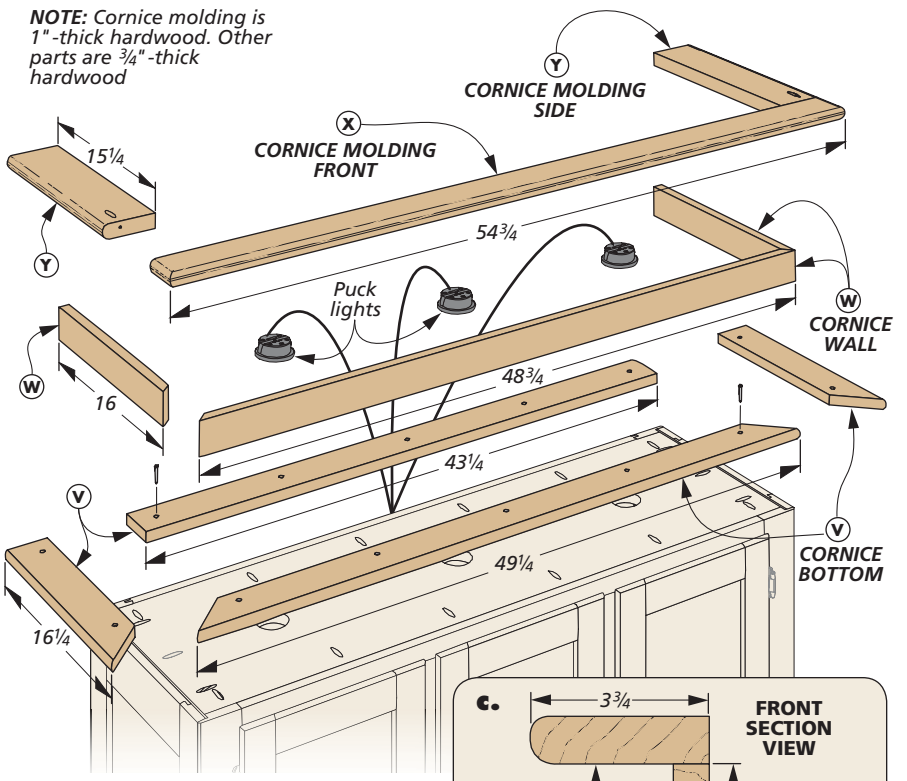

Completing the UPPER CABINET

At this point, the dining room hutch is nearing completion. All that's left is a three-layer cornice assembly that tops off the upper cabinet. Then you'll be ready to add lighting and move the hutch into your dining room.

CORNICE ASSEMBLY. A project this involved needs a worthy "crowning touch" at the top, and the cornice assembly fills this role nicely. It's a three-layer sandwich made up of a bottom, wall, and cornice molding at the top.

You can start at the bottom of the cornice and work your way up. Begin by cutting some extra-long pieces for the bottom and routing the profile on the front edges. (It's the same as the profile on the bullnose molding that's shown on page 46.) Then miter the pieces to fit at the front as shown above, and cut the back piece to size to fit between the sides. Drill countersunk holes in all the parts for attaching them above the cabinet, and then glue and clamp the frame together.

Next up is the cornice wall, which is made up of three pieces that are mitered to fit above the cornice bottom. Simply cut them to size, miter them to fit, and glue and clamp them in place above the cornice bottom.

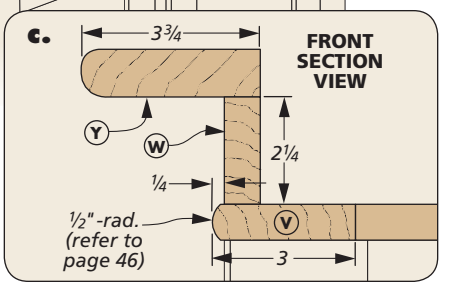

That just leaves the cornice molding at the top. There's nothing too complicated here, but it's important to note that the roundover on the bottom edge of the molding is different from the roundover on the top. Also, you'll want to make the cuts with a hand-held router after assembling the three parts, so the roundovers transition smoothly between them. The drawings at left show you how it's done.

After that, though, it's simply a matter of gluing and clamping the molding assembly to the top of the cornice wall. Stain and finish the entire cornice assembly, and then attach it to the upper cabinet with woodscrews.

FINISHING TOUCHES. If you know someone who owes you a favor, now is a good time to call them up. Moving the hutch from the shop to the dining room is a bit of a chore. It's best to move the two cabinets separately, and then reconnect them with stacking plates, as shown on page 50.

Once it's in place, you can wire up the puck lights and slip them in place at the top of the upper cabinet. Then it's time to start loading up the hutch with all your best dishes. The project is sure to be an elegant addition to any dining room. W

How-To: ROUNDOVERS

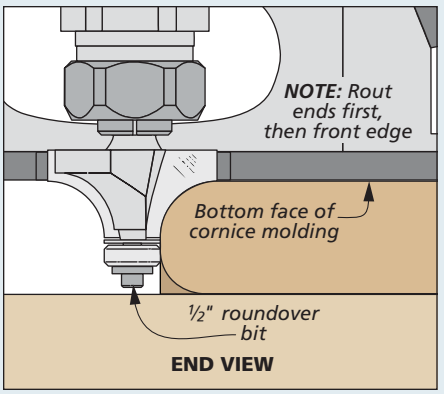

Bottom Edge. After assembling the cornice molding front and sides, rout a roundover around the bottom edges.

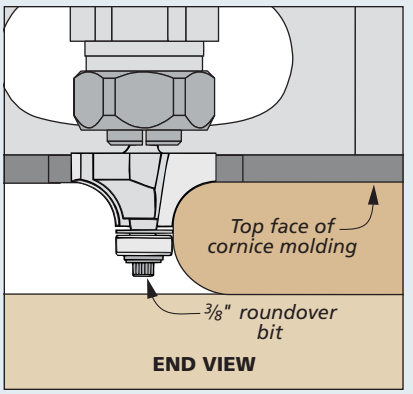

Top Edge. Flip the molding over, switch to a smaller roundover bit, and complete the profile on the top edge.

Materials, Supplies & Cutting Diagram for Upper Cabinet

A Top/Bottom (2) 3/4 ply. - 14 1/2 x 47 1/4
B Side Top Rails (2) 3/4 x 3 1/2 - 11 1/2
C Side Bottom Rails (2) 3/4 x 4 - 11 1/2
D Side Stiles (4) 3/4 x 2 1/2 - 42
E Face Frame Outer Stiles (2) 3/4 x 3 - 42
F Face Frame Mid Stiles (2) 3/4 x 1 1/2 - 39 1/2
G Face Frame Rails (2) 3/4 x 1 1/4 - 42 3/4
H Back Outer Stiles (2) 3/4 x 3 - 42
I Back Middle Stiles (2) 3/4 x 2 1/4 - 35 1/2
J Back Upper Rail (1) 3/4 x 3 1/2 - 43 3/4
K Back Lower Rail (1) 3/4 x 4 - 43 3/4
L Back Panels (3) 1/4 ply. - 13 3/4 x 35 1/2
M Shelf Back Rails (2) 3/4 x 3 - 46 3/4
N Shelf Front Rails (2) 3/4 x 2 - 46 3/4
O Shelf Side Rails (4) 3/4 x 2 - 14 3/8
P Door Top Rails (3) 3/4 x 2 1/2 - 9 3/4
Q Door Bottom Rails (3) 3/4 x 3 - 9 3/4
R Door Stiles (6) 3/4 x 2 1/2 - 40
S Top Rail Fillers (2) 1/8 x 2 - 13 3/4
T Bottom Rail Fillers (2) 1/8 x 2 1/2 - 13 3/4
U Glass Stop 1/4 x 1/2 - 480 rgh.
V Cornice Bottom 3/4 x 3 - 140 rgh.
W Cornice Wall 3/4 x 2 1/4 - 90 rgh.
X Cornice Molding Front (1) 1 x 2 3/4 - 54 3/4
Y Cornice Molding Sides (2) 1 x 3 3/4 - 15 1/4

- (44) 1 1/4" Pocket Screws
- (48) Shelf Support Sleeves
- (16) 1/4" Shelf Supports
- (2) 1 1/4" Knobs
- (6) 3/8" Overlay Hinges
- 3/4" Brads
- (1 pr.) Stacking Plates w/screws
- (2) 1/4" x 10" - 43 3/8" Glass
- (2) 3/32" x 11 3/8" - 35 3/8" Glass
- (3) 3/32" x 9 5/8" - 35 3/8" Glass
- (14) #8 x 1 1/4" Fh Woodscrews
- (3) Puck Lights

3/4" x 5" - 96" Cherry (3.3 Bd. Ft.)

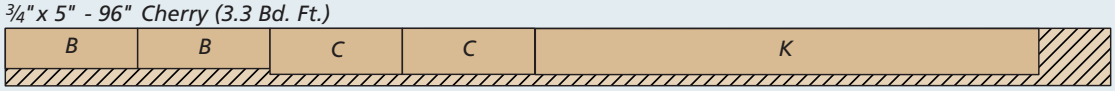

3/4" x 6" - 96" Cherry (4 Bd. Ft.)

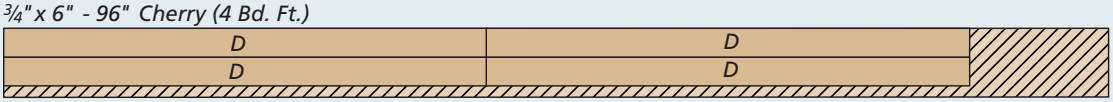

3/4" x 7" - 96" Cherry (4.7 Bd. Ft.)

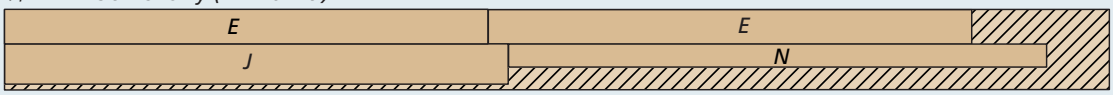

3/4" x 7" - 96" Cherry (4.7 Bd. Ft.)

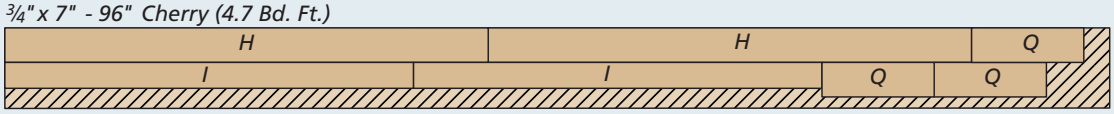

3/4" x 7" - 96" Cherry (4.7 Bd. Ft.)

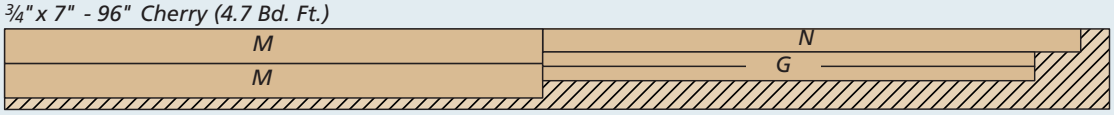

3/4" x 7" - 96" Cherry (4.7 Bd. Ft.)

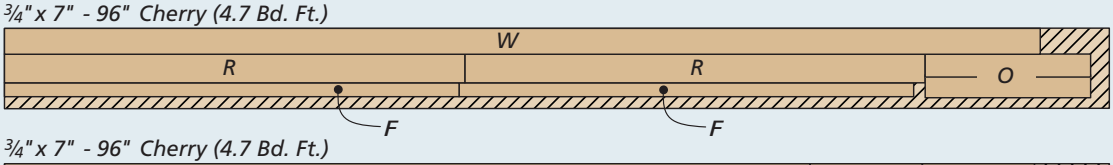

3/4" x 7" - 96" Cherry (4.7 Bd. Ft.)

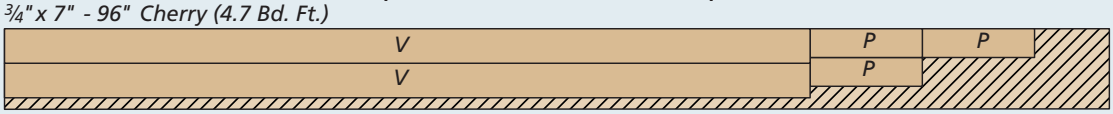

3/4" x 7" - 96" Cherry (4.7 Bd. Ft.)

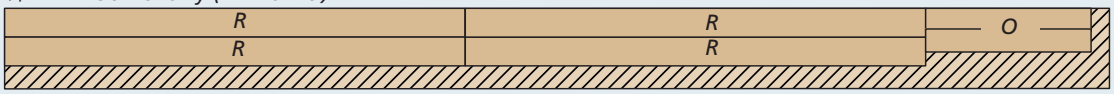

1" x 7" - 60" Cherry (3.6 Bd. Ft.)

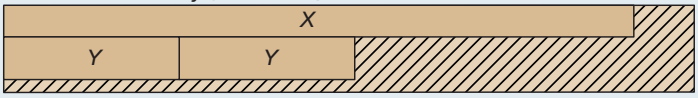

1/8" x 5" - 36" Cherry (1.3 Sq. Ft.)

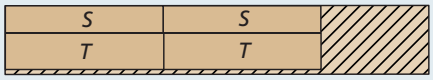

1/4" x 4" - 48" Cherry (2 Boards at 1.3 Sq. Each)

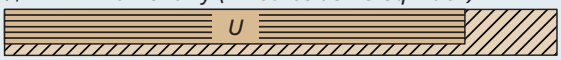

ALSO NEEDED:
One 48" x 48" Sheet of 3/4" Cherry Plywood,
One 48" x 48" Sheet of 1/4" Cherry Plywood

tuning up your Drill Press

The drill press is one of the unsung heroes of the workshop. You expect it to excel at its main function of drilling straight, clean holes in wood and metal. When everything is working just right, you get great results and don't think much about it. But like any machine in the shop, a little maintenance goes a long way to help ensure consistently good performance. Fortunately, a drill press is a pretty simple machine. A motor drives pulleys, which in turn spin a shaft inside the quill to rotate a bit in the chuck. Here are some tips for keeping those parts humming along year after year.

▲ Check the drive belts for wear and tear. If you see any signs of cracking, fraying, or splitting, it's time to invest in new ones.

START WITH THE MOTOR. It goes without saying that the hardest-working part of a drill press is the motor. Now, there's not a lot that can go wrong with a motor, so it's usually not a concern. But there are a couple of things to be aware of.

First of all, pay attention to how much noise the motor is making. It should run smoothly and quietly without complaining. If you notice excessive noise like rattling or grinding, however, it's time to investigate the cause. It could be a sign that the bearings are worn or one of the pulleys is damaged.

The bearings can be checked by removing the belt and turning the shaft of the motor by hand. If you notice any side-to-side play or if the shaft doesn't rotate with a smooth motion, the bearings may be worn. You can usually replace the bearings yourself. If you're not comfortable doing it yourself, another option is taking the motor to a repair shop.

While you're having a look at the motor, take some time to use a shop vacuum to remove any dust and debris. It's important to keep the cooling vents clear of dust. If a vacuum doesn't do the trick, try using compressed air.

CHECK THE BELTS & PULLEYS. With the belts removed, give them a once-over too. Check for any cracking or fraying, as shown in the photo at left.

There's something else to watch for when inspecting the belts. Some old V-belts can develop a "memory" if left tensioned on a pulley for extended

▲ To ensure the table is square to the quill, use a bent wire. Rotate the chuck by hand to ensure the wire contacts the table all around. For a more high-tech solution, refer to the bottom of page 8.

▲ After removing any rust with an abrasive, apply a protective coating of rust inhibitor or wax. This is especially important if you're shop is unheated or you live in a humid climate.

periods of time without being used. The belt conforms to the shape of the pulley and loses some flexibility. This can cause a thumping sound as the belt rotates around the pulleys. The result is vibration that ultimately translates to rough drilling. If you find any signs of excessive wear, it's time to invest in a new belt. Take the old one with you to an automotive parts supplier or hardware store to ensure you get the right size.

LINK BELTS. If you want the ultimate in smooth operation for your drill press, invest in link belts, as you can see in the main photo on the opposite page. They're more expensive than traditional V-belts, but go a long way to smoothing out the vibration. They won't develop a memory as they age and they can be made any length you need.

▲ Adjusting for proper belt tension (upper photo) means sliding the motor mount forward or back. A clamp lever (lower photo) allows this adjustment.

CHECKING THE PULLEYS. Before you install the belts, inspect the pulleys for damage. Make sure each of the flanges on the stepped pulleys are straight. Any bends, cracks, or nicks in the flange will wear the belts prematurely.

If you find that the pulley is damaged, you have a couple of choices. You could simply avoid placing the belt on the damaged area of the pulley. The problem with this is that it limits the adjustments available for setting the speed of the drill chuck.

Another solution is to replace the pulley. You can usually find parts from the manufacturer online. Just make sure that the pulley diameters on the new pulley match those on the old one.

PROPER TENSIONING. After inspecting the belts and pulleys, reinstall the belts. When doing this, it's important to have the right amount of tension. Too much tension and you can strain the bearings on the pulley shafts. Too little tension and the belt can slip on the pulley.

I like to shoot for about ½" of flex, as shown in the middle photo at left. On most drill presses, adjusting the tension means sliding the motor and its mounting plate forward or backward.

The mounting plate is attached to two rods that slide into the drill press casting. Loosening a clamp lever allows you to make this adjustment (lower left photo). If you find the motor doesn't budge, tap the mounting plate with a rubber mallet or a block of wood. This would be a good opportunity to wipe or spray a light lubricant on the rods to allow them to slide easily any time you need to make adjustments to the belt tension.

On drill presses with three pulleys, the center one moves slightly to allow tensioning of the front belt. As you tighten the rear belt, check to make sure the front one also has the right amount of tension.

SQUARING THE TABLE. Now that you've addressed any issues with the drive train, you can close the housing over the belts and turn your attention to the table. The first order of business is adjusting it square to the quill. In the left photo above, I'm using a stiff wire bent into a "Z" shape. With it chucked in the drill, rotate the shaft by hand and check that the bottom end of the wire contacts the table in all positions. If not, adjust the angle of the table and recheck it by rotating the chuck 360°.

CLEANING THE TABLE. While tending to the table, spend some time cleaning it (photo above). Remove any rust with an abrasive and apply your favorite rust inhibitor. This is especially important if you use an auxiliary table, which can trap moisture underneath.

▲ You can easily check for runout in the chuck by using a dial indicator with a magnetic base. A precisely ground piece of drill rod serves as a good reference for checking overall runout.

▲ If the overall runout is significant, you'll want to remove the chuck and check the runout on the arbor or shaft where the chuck mounts. If the runout is minimal, it's time to replace the chuck.

The next few tune-up tips I want to talk about go a little deeper into the mechanics of your drill press. This includes making sure the chuck and drill bit run straight and true without wobbling. And you can give the rack and pinion gears on the table mechanism a little attention, too.

CHECK THE BIT. A drill press isn't much use if it can't drill a precise hole. If the end of the bit is wobbling from side to side as the chuck spins, it can be difficult to accurately start the hole. Plus, a wobbling bit often results in an oversized hole, especially in wood.

Fortunately, it's fairly straightforward to track down the cause of a wandering bit, sometimes called runout. The first and most obvious place to check is the bit itself. If the bit isn't straight to begin with, you're better off tossing it and buying a replacement. Simply switching bits in the chuck can tell you if the problem is with the bit or if there's a deeper issue.

If switching out the bit doesn't seem to fix the problem, check to make sure that the bit is centered in the chuck. Sometimes, as you're tightening the chuck, the bit will get caught between two of the jaws instead of being gripped by all three.

CHECK FOR RUNOUT. If you know the bit is straight, then you need to dig a little deeper to find the source of the runout. In the photos above, I'm using a dial indicator for this task.

The first thing to do is chuck a straight object in the chuck. Here, I'm using a short length of drill rod. After making sure the rod is centered and tight in the chuck, rotate the chuck slowly by hand and watch the needle on the dial indicator. Anything less than 0.005" of total runout is acceptable for a woodworking drill press. If there's more than that, it's time to take a closer look at the drill chuck. (Note: You'll want to place the dial indicator close to the chuck to avoid exaggerating the error.)

REMOVE THE CHUCK. As simple as the mechanics of a drill chuck are, they can still wear out over time. And this may lead to inaccuracies when drilling. To eliminate the chuck as the source of runout, you need to remove it from the arbor. How you do this varies with the make and model of drill press, so you'll want to consult the owner's manual or contact the manufacturer.

There are two common methods used for removing a drill chuck. They're shown at the top of the opposite page. One method makes use of a tapered, steel drift pin. This procedure is used for a chuck that is mounted to an arbor that has a taper at each end. The chuck fits onto a short *Jacobs* taper. A No. 33 *Jacobs* taper is a common size.

The opposite end of the arbor fits into a *Morse* taper socket in the quill. You can

Replacement Chuck: BY THE NUMBERS

Finding a replacement chuck for your drill press may be as simple as looking at the numbers. Most drill chucks are stamped with a model number, *Jacobs* taper number (33, in this case), and the capacity.

With these numbers in hand, you can find a suitable replacement. You can find replacement chucks online or at a well-equipped hardware store or machinist's supply.

◀ The numbers stamped on your old drill chuck should give you enough information to get a replacement.

see what the arbor looks like in the left photo at the bottom of the page.

Removing this style of arbor is shown at right. Insert the appropriate sized drift pin into a slot in the quill. The size of drift pin is based on the size of *Morse* taper (0 through 7). Most drill presses up through ½" capacity use a No. 2 *Morse* taper. Simply tap the end of the drift pin until the arbor drops free from the quill.

Other drill press models may have their chucks mounted directly to the end of the drill press shaft. They use a *Jacobs* taper, as well. To remove the chuck on this style of drill press, you'll need a pair of wedges as shown in the lower photos at right. Use a C-clamp to force the wedges together to remove the chuck. A few light taps with a hammer will also work to drive the wedges together.

CHECK FOR RUNOUT AGAIN. With the chuck removed, clean the end of the arbor or shaft with solvent (left photo below). For a *Morse* taper socket, twist a rag dampened with solvent into the socket to make sure it's clean also.

Now you can check the end of the shaft (or arbor) for runout, as in the upper right photo, opposite page. Chances are you'll find minimal runout. Again, less than 0.005" of total runout is acceptable. If there's more than that, then I'd suspect that the shaft bearings might be bad.

REPLACE THE CHUCK. If your investigation showed significantly more runout at the chuck than at the shaft, I'd look into replacing the chuck. Just make sure that the size of taper on the replacement fits your drill press. Chucks are stamped with a model number that can help you verify this, as shown in the box on the opposite page. The owner's manual for your drill press may be a good resource.

If you're investing in a new chuck, now would be a good time to consider a keyless chuck. It makes bit changes easy, and you don't need to worry about misplacing and tracking down the chuck key.

Installing a chuck is as simple as seating it back on the shaft or arbor. Retract the jaws first so you don't risk damaging them. Give the end of the chuck a couple of firm whacks with a brass or wood mallet to fully seat it on the shaft.

CLEAN & LUBE THE GEARS. There's just one more thing I do to complete the tune-up. And that's to clean and lubricate the rack and pinion gears used to raise and lower the table. Use a stiff bristle brush to remove built-up sawdust and grime. Follow up with a lubricant. Some manufacturers recommend a light grease. I use a dry *Teflon* lubricant that has less of a tendency to attract sawdust.

To find out were to buy drill rod, wedges, and drift pins, turn to Sources on page 67. You'll also find out where you can buy replacement drill chucks.

PERIODIC MAINTENANCE. Using these tips on a regular basis will keep your drill press working as it was designed. The results will show every time you use it. W

◄ Use a drift pin to remove the arbor and chuck assembly from the quill.

◄ Some drill presses require a pair of specialty wedges to remove the drill chuck from the arbor.

▲ To avoid having the drill chuck or arbor fall out of the drill press accidentally, make sure that the shaft and socket are clean.

▲ Cleaning the rack and pinion gears then applying a lubricant ensures that the table raises and lowers easily.

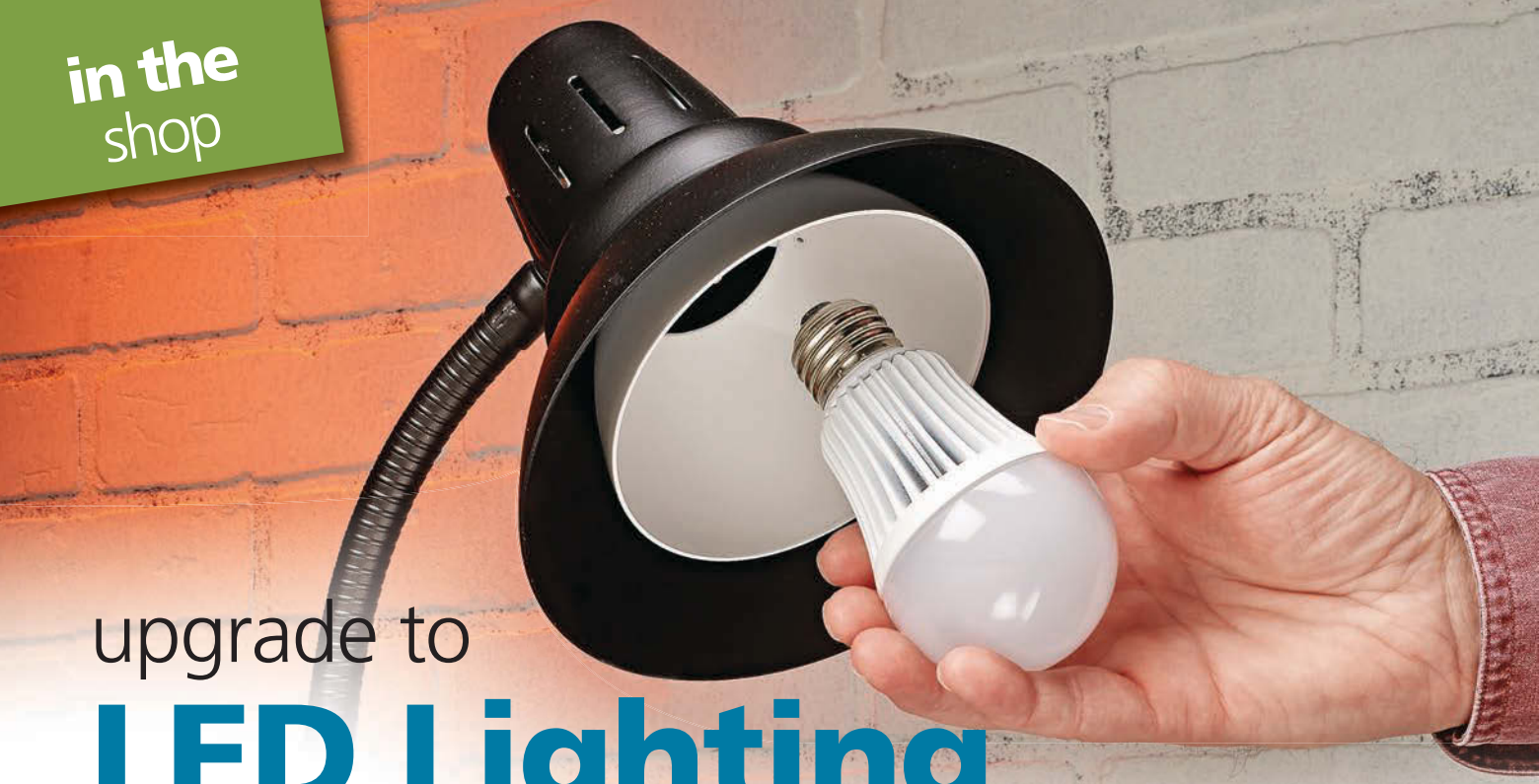

upgrade to LED Lighting

It's my opinion that you can't have too much light in a workshop. When setting up and using tools or doing layout work, ample lighting makes these tasks easier on the eyes. One way to ensure adequate lighting is to upgrade to LEDs. They have a lot of benefits in the shop.

OUT WITH THE OLD. The lighting in my shop is a mix of bare light bulbs in porcelain fixtures and inexpensive fluorescent shop lights. Since the phase-out of old-style incandescent light bulbs, I had been using compact fluorescent bulbs (CFLs). But they contain small amounts of mercury and should be recycled properly. They're not the best solution. Instead, I've been replacing some of the bulbs with LED lighting.

IN WITH THE NEW. While browsing the aisles of my local home center, I realized that LED bulbs are becoming more prominent. And for good reason. Light-emitting diodes (LEDs) are super-bright and very energy efficient. So much so that some manufacturers are shifting away from fluorescent bulbs and tubes to producing LED lighting instead.

HOW THEY WORK. LEDs are solid-state components mounted to a circuit board. This means there are no burning filaments that eventually break, as in conventional incandescent bulbs. You can see the rectangular-shaped LEDs in the photos at left and below.

LEDs don't produce a lot of heat on their own. However, the circuitry required to transform your household current to the low voltage required for LEDs can get pretty warm. That's why some bulbs incorporate a heat sink to dissipate some of that heat (left photo).

▲ Replace the fragile halogen bulb in a work light with a bright, long-lasting LED replacement bulb.

▲ LED bulbs are available in a variety of sizes and styles.

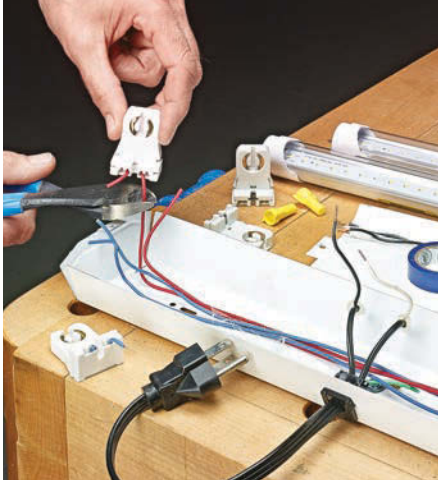

▲ To replace fluorescent tubes, start by cutting the power wires and the wires to the old tombstone sockets, then remove

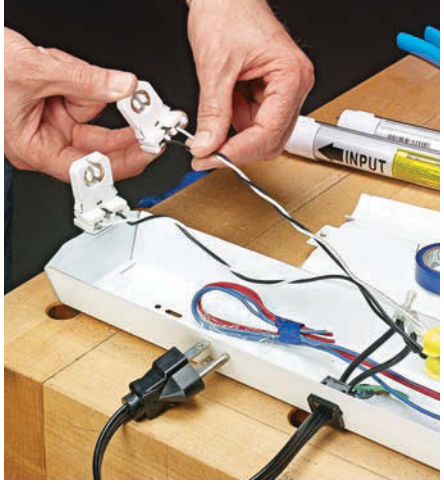

▲ At one end of the fixture, connect the wires from the new tombstones to the power source to supply the LED tubes.

▲ Reassemble the fixture and install the new LED tubes into the tombstone sockets before reconnecting the power.

Low voltage operation makes LEDs much more efficient than other forms of lighting. For example, to get the 60-watt equivalent, an LED bulb will only use about 10 watts. That's a pretty significant energy savings.

Another benefit to LEDs is their long life. Some LED bulbs are rated for a lifetime of over 20 years, assuming that you'll use them for three hours a day.

THE COST. LED bulbs cost more than your traditional incandescent bulbs. But the fact that LEDs are more efficient helps to offset the higher cost. Even better, in the few months I've been looking at them, the prices keep dropping.

FLUORESCENT REPLACEMENTS. Switching out light bulbs is one thing, but what about replacing the fluorescent tubes in your shop lights? Believe it or not, there are LED replacements available for those, too (photo at right). They're just starting to appear in some home centers but you can also order them online. They're pricey, at between $30-40 each, so you may want to replace the tubes in only one fixture at a time.

You can buy replacement LED tubes that plug right into a fixture that has an instant-start ballast. Other LED tubes require you to rewire the fixture to bypass the ballast altogether. But this means you won't have the buzzing and flickering that you may have experienced when turning on the light.

The process I used to make the conversion to LED tubes is shown in the photos above. Some suppliers provide new "tombstones" you'll need to use for the new tubes. Other tubes have a wire pigtail that you simply tie into the wires that supply power to the fixture.

▲ The result of replacing fluorescent tubes with LED tubes is brighter and more efficient lighting in your workshop.

DAYLIGHT FOR THE SHOP. When shopping for bulbs and tubes for the shop, I look for the brightest (higher lumens ratings). And I prefer "daylight," or cool white. It's the best, cleanest light for shop tasks. For other shop uses for LED lights, check out the box below. W

SHOP USES FOR LED LIGHTING

▲ A flexible neck allows you to aim the light wherever it's needed.

LED lighting has other applications besides general shop lighting. I use LED task lights near my workbench and tools like my drill press and scroll saw. The portable flex light from *Lee Valley* shown at left is one example. You can focus the light right where you need it.

One other LED light I've installed in my shop is an emergency exit light (right photo). Consider what might happen if you're in the shop and the power goes out. A battery-operated LED light will help you get out safely.

▲ Stumbling your way out of a dark shop when the power goes out can be dangerous. This fixture comes on during power outages to light the way to the door.

simple, accurate Bar Gauges

I've always enjoyed learning traditional woodworking tricks and techniques. Especially if that old trick helps me do the job more quickly and accurately. One of those basic techniques I've come to appreciate is the use of bar gauges. They're deceptively simple, but once you get in the habit of using them, you'll find your tape measure remains in your apron pocket more often.

WHAT THEY ARE. In short, bar gauges are basically two sticks held together to take or transfer a measurement. I want to talk about a few commercial ones, as well as a few shop-made versions, and explain how you can put them to use.

For any bar gauge, you size the length of the strips or rods to suit the task at hand. It's convenient to have a few different lengths on standby to keep you from having to stop and make a special set in the middle of a project. Whether they're shop-made or purchased, bar gauges will find many uses around the shop when building projects.

CHECKING FOR PARALLEL. One use for bar gauges is checking for parallel. This comes in handy for cabinet work, as shown in the photo above. It's helpful to make sure cabinet sides are parallel and not bowed in or out before attaching a face frame or installing a door. I made the bar gauge shown in a little over an hour using a block of wood with a threaded insert and a thumbscrew to hold a pair of ⅜"-dia. dowels.

NO TAPE MEASURE REQUIRED. Taking a measurement and transferring it to set up a tool is another great use for a bar gauge. For example, you can obtain the length

▲ Two wood strips held with a binder clip make it easy to obtain an inside dimension to size the length of a door stile.

▲ The bar gauge can be used to transfer measurements to set up the table saw for accurate, repeatable cuts. In this case, the bar gauge is used between the blade and a stop block attached to an auxiliary miter gauge fence to cut door stiles to precise lengths.

of a door stile in an opening. Then use the bar gauge to set up a stop on an auxiliary miter gauge fence at the table saw. One end of the gauge is butted up against a tooth on the saw blade. Then the stop is placed against the opposite end. This positions the stop for precise and identical lengths for all of the stiles, as in the lower photos, opposite page.

PANEL SIZE. In the upper right photo, I'm using a bar gauge set available from *Rockler* to determine the size of a drawer bottom. You could use the same technique for sizing a panel for a frame and panel door. This task is awkward when using conventional measuring tools. Bar gauges eliminate the guesswork and math involved in taking the depth of the groove into consideration.

The *Rockler* gauge also uses ⅜"-dia. dowels and comes with a variety of heads for various measuring and marking tasks. These are shown in the inset photo. You can also use the set as a trammel for laying out arcs and circles. The great thing is, your only limitation is the length of the dowels used.

CHECKING FOR SQUARE. Bar gauges excel at checking assemblies for square, as well. In the right photo, I'm using a set of *Veritas* bar gauge heads from *Lee Valley*. You supply the strips of wood of any length. With the *Veritas* kit, brass pins are included that you can thread into the edges of the strips. This turns the bar gauge into a large caliper. I'm using the pins here to check a drawer assembly for square. The pins fit into the corners across the diagonals of the drawer assembly. When the fit of the bar gauge is the same, I know the drawer is square.

▲ Bar gauges can go where tape measures can't. Here, the tapered tips of the gauge fit inside the grooves on a drawer to size the bottom panel.

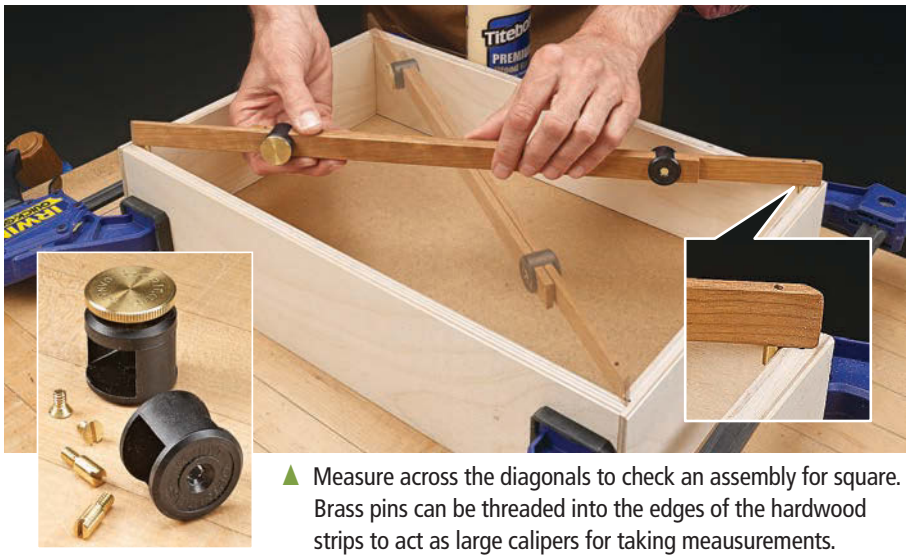

▲ Measure across the diagonals to check an assembly for square. Brass pins can be threaded into the edges of the hardwood strips to act as large calipers for taking meausurements.

Instead of pins, you can bevel the ends of the strips to allow them to fit into corners or grooves.

OUTSIDE MEASUREMENTS. Verifying outside dimensions or the dimensions of multiple parts is another easy task with a bar gauge. The *Veritas* bar gauge shown below comes with steel rods of varying lengths that can be threaded together for custom lengths. Three styles of solid brass tips allow you to complete a variety of measuring tasks for your projects simply by swapping the tips.

The wide, mushroom-shaped tips engage the outside edges of a workpiece or assembly. Here, I'm measuring for a panel that to be glued to the edges of the box. With this method, there's no need to remember numbers from a tape measure.

The nice thing about the *Veritas* bar gauge is that it can convert this outside measurement to an inside measurement for setting up your saw to cut the workpiece to size. The brass tips are designed so that the distance between the inside of the mushroom-shaped tips is the same as the distance between the ends of the ball or pointed tips. So by leaving the rods locked in position and simply switching to the ball heads, for example, you can then use the bar gauge to set the rip fence for cutting the panel to size.

MULTIPLE USES. By now, it's easy to see how bar gauges can fit into your arsenal of shop tools. To find out where to buy one of the commercial versions, turn to Sources on page 67. W

▲ Interchangeable brass tips make this bar gauge a useful accessory for many measuring tasks. It comes with various lengths of steel rod that can be threaded together.

woodworkers' Blade Preferences

One of the first and best pieces of advice I received when I bought my table saw was to buy a high-quality combination blade. This one step worked like an instant upgrade to help my benchtop table saw make smooth cuts.

Just as its name implies, a combination blade works well for a variety of tasks from ripping to crosscutting, and even for cutting joinery. For some, it's the only blade they use outside of a dado blade.

While a combination blade carries the lion's share of the load, most woodworkers have at least one other blade in their kit. But with all the choices available, deciding which other blade to get can be overwhelming. To help you make the best choice, I asked a few woodworkers around here about the blades they've added to work hand-in-hand with their combination blade. Their experiences will allow you to invest in a blade that you'll turn to often and won't just end up hanging on the wall gathering dust.

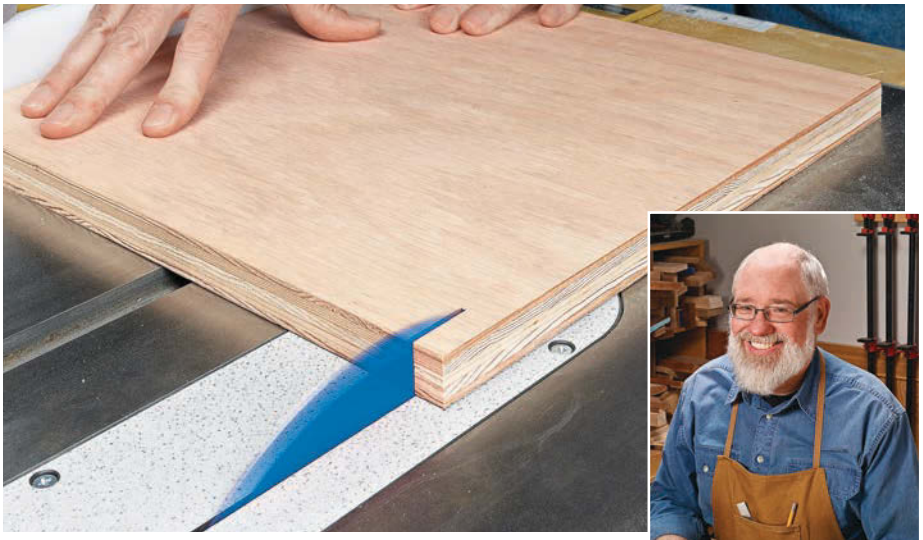

▲ Red oak plywood is notorious for tearing out when cutting across the grain. A dedicated crosscut/plywood blade with 80 teeth helps eliminate the problem.

RANDY MAXEY, SENIOR EDITOR. For years, Randy got by with a *Freud Premier Fusion* combination blade. The blade rips efficiently and crosscuts so smoothly he didn't see the need for another blade.

That is until he started building some cabinets out of red oak plywood. The stringy nature of the red oak face veneer resulted in tearout when making cuts across the grain.

The solution came in the form of an 80-tooth blade designed for making glass-smooth crosscuts in hardwood and plywood. (Randy uses an *Irwin/Marples* 1807370.) Besides the increased number of teeth, the top of each tooth is steeply beveled. The bevels alternate direction to score the sides of the cut. When paired with a zero-clearance insert, the results can't be beat.

WYATT MEYERS, SENIOR EDITOR. Among the first tasks in building a project is ripping wide boards into smaller parts. A combination blade rips well, but cuts significantly slower than a dedicated rip blade. If there's a lot of ripping to be done, that extra time can really add up.

For Wyatt, even a regular rip blade wasn't the answer for his contractor-style saw. The blade often struggled to cut hard woods. And it left noticeable marks that needed to be smoothed out.

The solution was a thin-kerf, glue-line rip blade (*Freud* LM74R010). This blade has 30 teeth that are slightly beveled on the top edge. This blade cuts quickly compared to a combination blade and leaves a smooth edge that's ready to glue up into wide panels with no sanding needed. Sounds like a win-win situation to me.

▼ A thin-kerf blade removes less material than a standard 1/8" blade does. That reduces the strain on your saw's motor and makes it less likely to stall when cutting hard lumber.

▼ A traditional rip blade with 24 teeth and a flat-top grind make quick work of cutting grooves and tenon cheeks. The teeth leave a crisp, square corner at the bottom of the groove.

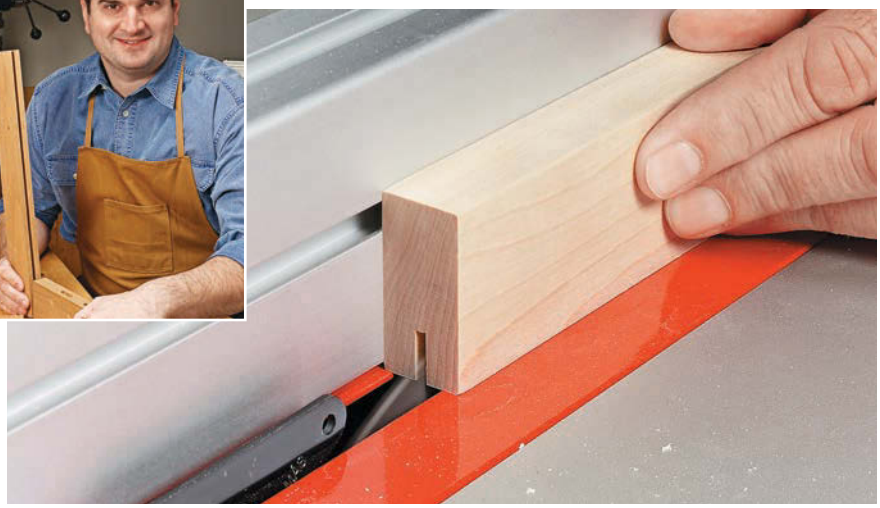

JOHN DOYLE, DESIGNER/BUILDER. There's much more to table saw work than crosscutting and ripping. Like many woodworkers, John turns to his table saw to cut joinery. And for tasks like cutting grooves or tenon cheeks with a tenoning jig, he employs a 24-tooth rip blade (*Freud* LM72R010). The key features of this blade are the 1/8" width and the flat-top grind on the teeth.

In addition to ripping hardwoods efficiently, a full-kerf blade means John can cut grooves for a stub tenon and groove joint to match the thickness of a plywood panel in just two passes (right photo). The flat-topped teeth leave a crisp flat groove instead of the pointed "bat ears" a combination blade leaves. Plus, fewer teeth keep the saw from bogging down. W

Versatile: DADO SET

Every woodworker I talked with agreed there's one other blade to include — a stack dado blade set, like this one from *CMT* (230.012.08). A dado set consists of a pair of scoring blades that you combine with the chippers and shims.

Used alone, the scoring blades cut a 1/4"-wide kerf. Add chippers to obtain any width from 1/4" to 13/16". It turns your saw into a joinery powerhouse. Now you can quickly and easily cut rabbets, grooves, tenons, dadoes, and more.

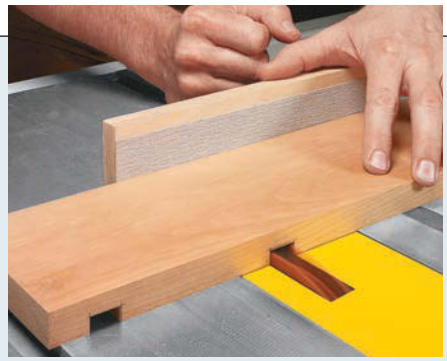

▲ A high-quality stack dado blade set simplifies the task of cutting a variety of joints, like these custom-size dadoes.

tips from our shop

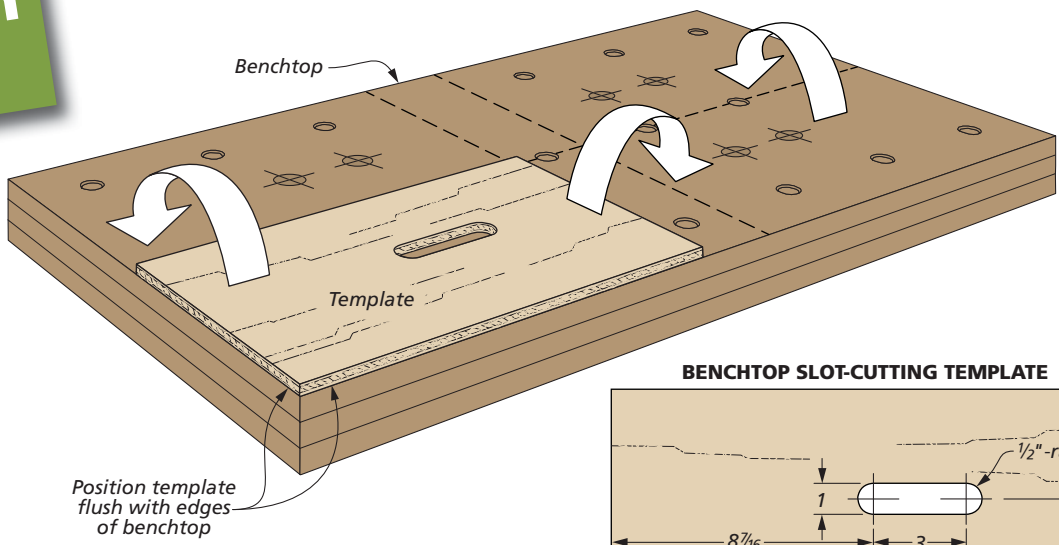

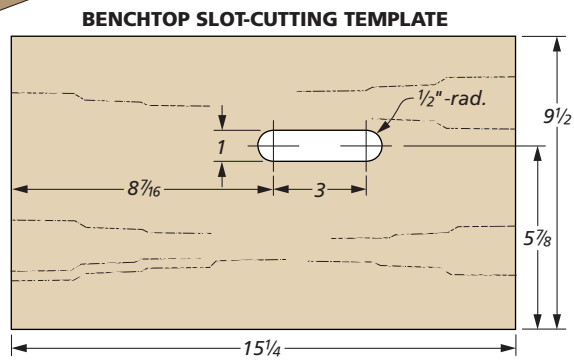

Shop Notes

Cutting Perfect Slots

The benchtop for the scissor-lift workbench on page 20 has four evenly spaced slots on its surface. These slots are sized to allow a bar clamp to fit through, providing for a wide range of clamping options. In order to keep all four slots uniform in size, I made the template shown above. The template acts as a guide during the three-step process used to create the slots.

TEMPLATE CONSTRUCTION. Start by cutting the template to size from ¼" plywood. Carefully lay out the slot location on the template and drill two holes at the drill press. These holes define the ends of the slot. Use a jig saw to remove the rest of the waste between the holes. You'll want to spend a little time with a file and sandpaper to ensure the slot walls are smooth.

ROUGH SLOTS. Position the template as shown in Figure 1, at right, and clamp it in place. (A few spacer blocks under the benchtop ensure you won't drill or cut into your workbench surface.) Using a drill bit that is slightly smaller than the final width of the slot, drill the two holes at the ends of the slot. Just as with the template construction, use a jig saw to remove the rest of the waste between the holes (Figure 2). Be sure to stay to the inside of the template edge.

CLEANING UP THE WASTE. Figure 3 shows the rest of the process for completing the slot. Start by using a pattern bit to remove the majority of the waste (detail 'a'). Because most bits aren't long enough to reach all the way through the benchtop, you'll then have to switch to a flush-trim bit. Just turn the benchtop over and remove the remaining waste, as shown in detail 'b.' You can then "flip" the template to the next position (above) and repeat the process to complete the rest of the slots.

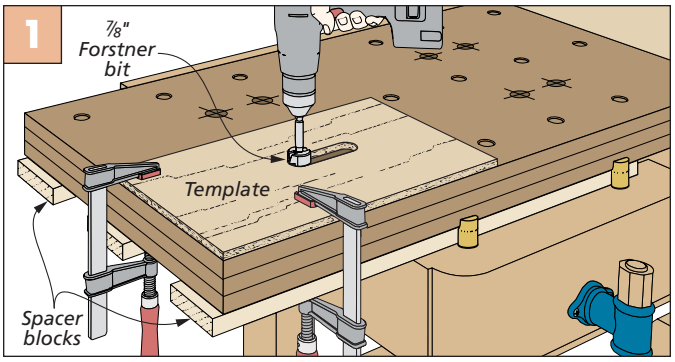

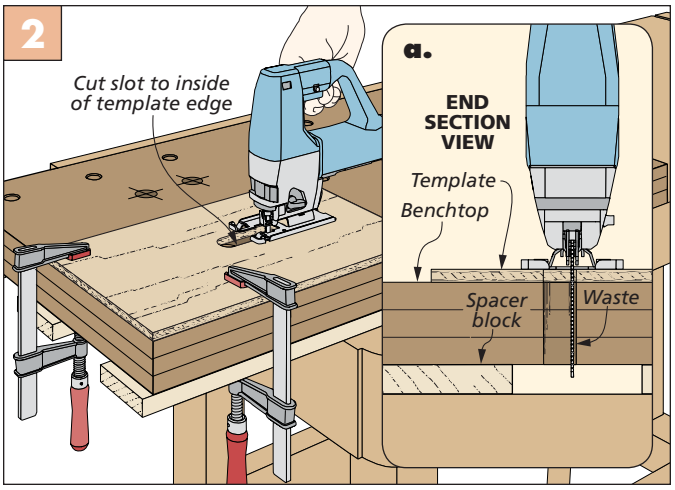

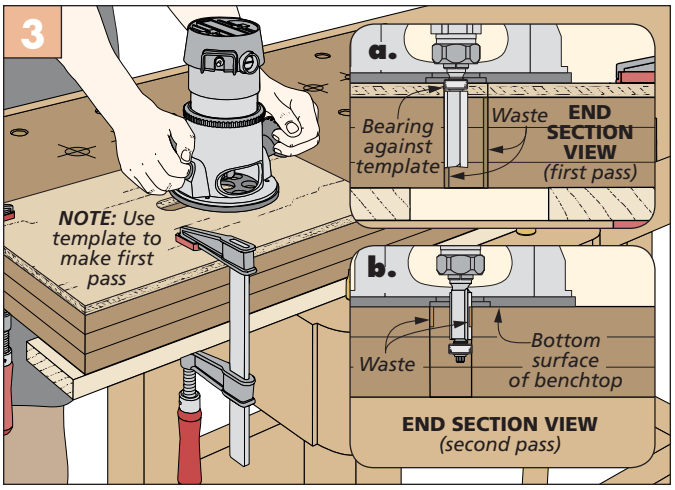

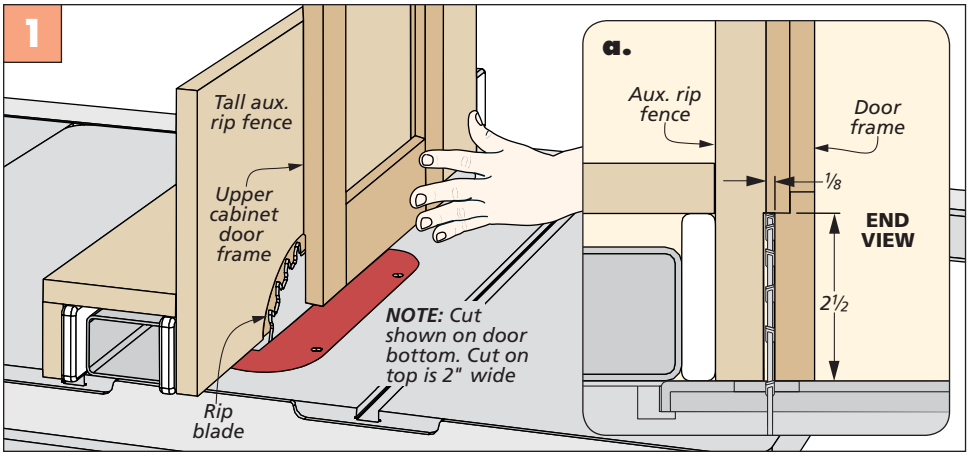

▲ Filler strips add strength to the hutch's doors.

Reinforced Door Frames

The cherry hutch on page 40 features frame and panel doors joined with "cope and stick" joints. When the doors hold a thin plywood panel in the grooves in the frame (as with the hutch's base cabinet), the joints offer plenty of strength. But the hutch's upper cabinet features thick glass panels in large doors. So I added one extra detail to make the doors stronger.

FILLER STRIPS. The solution I arrived at was to cut away a portion of the doors at the top and bottom, and then add "filler strips" to the doors. This essentially creates a lap joint at the top and bottom of the doors, adding a lot of strength to the assemblies. Plus, the final appearance offers a nice, clean look, too (photo, above right).

ADDING THE FILLER STRIPS. To reinforce the doors, I started by cutting the joints and assembling the doors as explained on page 43. Then I cut a rabbet around the inside opening of the door frames for the glass (refer to the drawings on page 48).

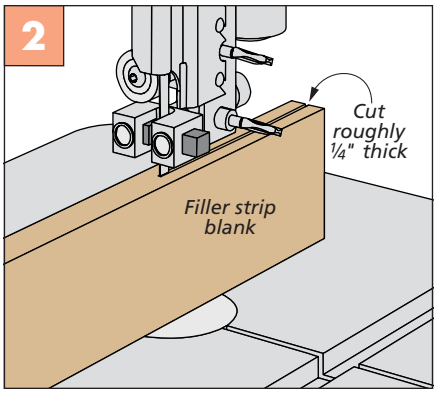

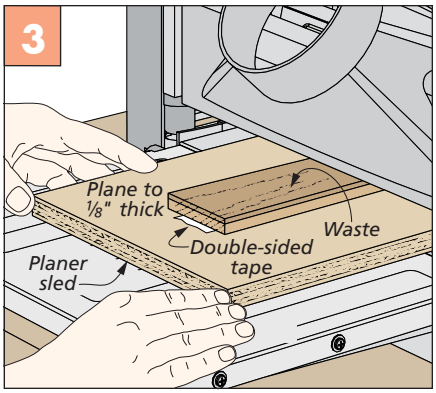

Now you can set up the table saw to make a light cut at the top and bottom of the doors (Figure 1). Just set the height of the blade to the bottom of the rabbet for the glass.

All that's left at this point is adding the filler strips. I started by resawing some stock at the band saw (Figure 2) and planing it down to final thickness (Figure 3) before gluing the strips on. Then you can complete the assembly of the doors as detailed on page 51.

The "Key" To Face Frame Alignment

Assembling the hutch's face frame isn't difficult. The parts are simply joined together with glue and pocket screws. But one detail that was important to get right was the alignment of the outer stiles with the lower rail. That's because the stiles have dadoes that need to align perfectly with a groove on the rail.

Fortunately, the answer here was fairly simple. I just cut ¾"-thick hardwood "keys" to insert in the grooves and dadoes during assembly (drawing below). This ensured that the parts would stay aligned as I assembled the face frame.

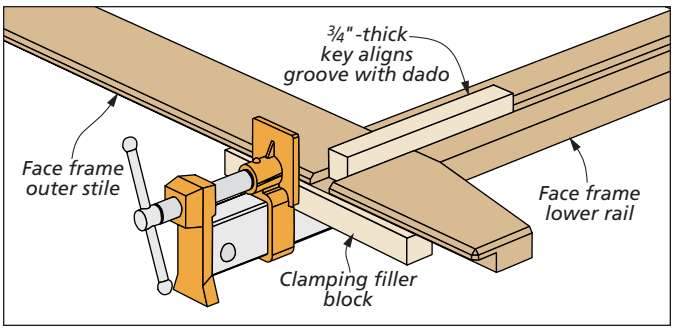

Open Your Eyes

Springs on the the router mortising machine (page 30) retract the router carriage to its raised position. The springs are attached to eye bolts and a screw eye. To get the springs installed, you need to open the eyes slightly. The photo shows how I used a cold chisel and hammer to get the job done.

Cutting a Ramped Dado

I use a toggle clamp to secure a workpiece to the fence on the router mortising machine (page 30). With just a flick of the lever, it provides the right amount of holding strength to keep the workpiece from shifting during a cut.

It works well on its own, but I added a few "upgrades" to make it work even better. A strip of sandpaper on the fence and a wider hardwood clamp face increase the grip. The other improvement I want to highlight here is to angle the toggle clamp. This way the clamping pressure is directed slightly down against the table, as well.

USE A SPACER. For this to work, the clamp sits in a ramped dado I cut at the table saw. To make this cut, I used a thin spacer block to raise the back edge of the clamp base, as shown in the upper right drawing. The block is sized to match the deepest part of the ramp. Fasten the block to the back edge of the plywood blank with double-sided tape.

Then all you need to do is make several passes over a dado blade. The photo at right gives you the general idea. Like the spacer, the dado blade is raised to match the deepest portion of the ramp. I started cutting the ramp by using the rip fence to roughly center the base on the dado blade.

SEVERAL PASSES. Make one pass, then flip the piece end for end to make a second pass to center the dado. Now you can move the rip fence closer to the blade and make another set of passes. Repeat this process until you reach the layout lines.

The final step is to clean up the score marks on the surface of the ramp with a sanding block.

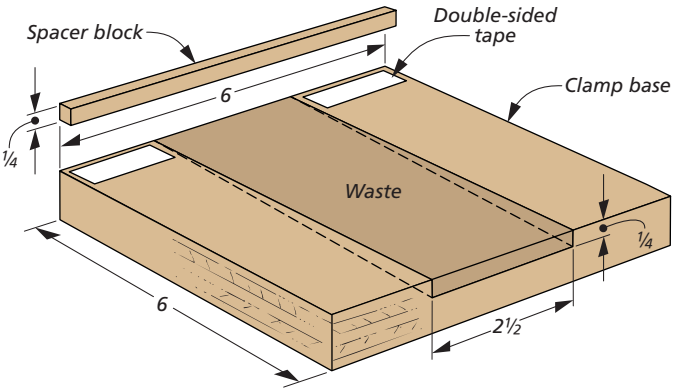

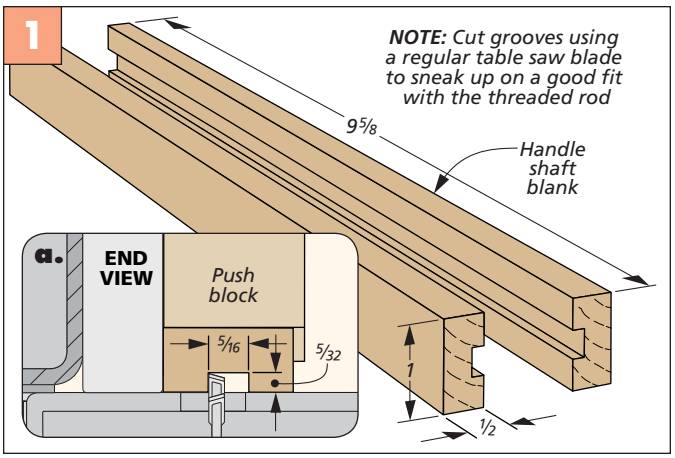

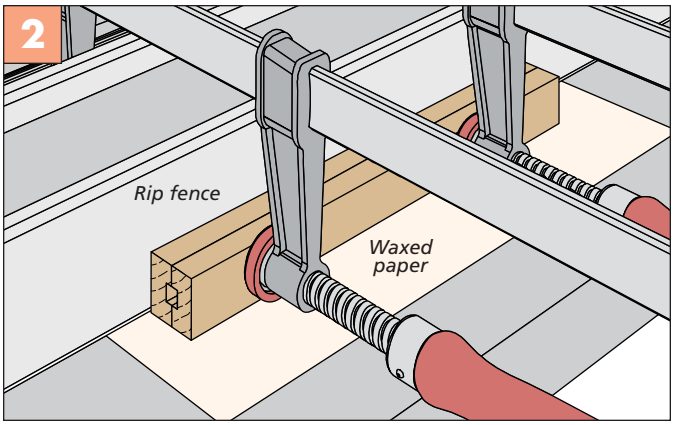

A Long Hole Without Drilling

Overall, the router mortising machine is a straightforward project to build. But there are a couple of head scratchers that you'll run across. The hardwood handle for lowering the router carriage is a good example and deserves a closer look.

The rounded wood handle is comfortable to grab, but I wanted to make sure it would be strong enough for long-term use. And I needed to make a solid connection to the arms. The solution to both of these challenges was to run a length of threaded rod through the handle. Sounds simple enough, but drilling a long hole through end grain isn't easy to do. So rather than invest in a long bit, I took another route.

TWO-PIECE CONSTRUCTION. Instead of making the handle out of a single piece, I glued it up from a pair of blanks. Take a look at Figure 1 to get the gist of the idea. By using two pieces, I could cut a groove along each piece so that when the two halves were joined, the result is the hole I needed.

Figure 1a shows how to cut the groove with a ⅛"-wide blade. This allows you to make a pass, flip the workpiece, and then make a second pass to create a perfectly centered groove. With a few fence tweaks and several more passes, you can size the groove for a nice fit with the threaded rod.

ASSEMBLY. Gluing up the halves into the handle presents another challenge. The two parts need to stay aligned. So I used my table saw rip fence and saw table to create a form, as shown in Figure 2. A sheet of waxed paper prevents you from getting glue on the saw table. Speaking of glue, use a small amount so you don't get any squeezeout in the hole. W

hardware & supplies
Sources

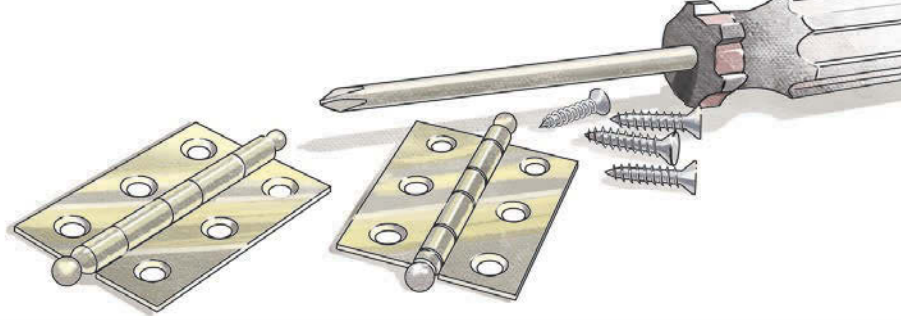

Most of the materials and supplies you'll need to build the projects are available at hardware stores or home centers. For specific products or hard-to-find items, take a look at the sources listed here. You'll find each part number listed by the company name. See the right margin for contact information.

BAMBOO *(p.10)*

Northwest Bamboo Inc., *Plyboo*, and *Woodworkers Source* are a few online sources for purchasing bamboo lumber.

MORTISING BITS *(p.12)*

- **Enco**
  - *¼" End Mill* 325-2264
  - *5/16" End Mill* 325-2266
  - *⅜" End Mill* 337-5355
  - *½" Roughing Bit* 328-0859

DRAWER SLIDES *(p.18)*

- **Rockler**
  - *Drawer Slide Screws* 42334

SCISSOR-LIFT BENCH *(p.20)*

- **Grizzly Industrial**
  - *Hydraulic Table* H8099
- **Rockler**
  - *7" Bench Vise* 68888
  - *Magnetic Tool Holder* . . . 81281
  - *Dust-Free Shop Tray* 43500

SPICE CAROUSEL *(p.26)*

- **Lee Valley**
  - *Friction Disks* 88K59.08
  - *Spice Bottles* 12K82.10
  - *6" Lazy Susan* 12K01.03
  - *Bumpers* 00S20.05
- **American Woodcrafters**
  - *2" Birch Knob* KB-200

To finish the maple carousel, *Pecan* water-based stain was used and the inside of the holes were painted black. For the painted carousel, *Somerset Gold* milk paint was followed by a coat of *Basil Green* milk paint. After sanding to simulate wear, a burnt umber glaze was applied. The stain, paint, and glaze are from *General Finishes*. A spray lacquer was used for the final two coats.

MORTISING MACHINE *(p.30)*

- **McMaster-Carr**
  - *Push-Button Nut* . . . 98150A730
  - *Extension Spring* 9654K332
  - *5/16" Through Knobs* . . . 5993K64
  - *5/16" Studded Knob* 5993K26
  - *¼" Through Knob* 5993K22
  - *Toggle Clamp* 5127A13
- **Lee Valley**
  - *T-Track* 12K79.22

DINING ROOM HUTCH *(p.40)*

- **amazon.com**
  - *Cope & Stick Bits* . . B001GI7TCM
- **Lee Valley**
  - *1¼" Knobs* 02W26.22
  - *Shelf Supports* 05H20.41
  - *Support Sleeves* 05H20.45
  - *16" Drawer Slides* 02K42.16
  - *Stacking Plates* 01S07.01
  - *Puck Lights* 00U50.20
- **Hardware Source**
  - *⅜" Inset Hinges* 400171
- **Veneer Supplies**
  - *Cherry Veneer* PBCHRFC28

The hutch was stained with a mixture of three parts *Zar* cherry stain and one part *Wood Kote Jel'd* stain (cherry). Then it was sprayed with two coats of lacquer.

DRILL PRESS TUNE-UP *(p.54)*

- **Rockler**
  - *Link Belt* 52233

To remove the drill chuck, you'll need to use wedges or a drift pin. You can find these and the drill rod at *McMaster-Carr* or *Enco*.

LED LIGHTING *(p.58)*

- **amazon.com**
  - *LED Tubes* B00IT1DVB2
- **Lee Valley**
  - *LED Work Light* 15J77.01
  - *Emergency Light* 99W20.42

BAR GAUGES *(p.60)*

- **Rockler**
  - *3-in-1 Bar Gauge* 53052
- **Lee Valley**
  - *Bar Gauge Heads* 05N31.01
  - *Veritas Bar Gauge* 05N29.01

TABLE SAW BLADES *(p.62)*

- **Rockler**
  - *Freud Premier Fusion* . . . 20141
  - *Freud Glue Line Rip* 28768
  - *Marples Crosscut/Ply* 49104
- **Woodcraft**
  - *CMT Dado Set* 147986

Get the all-new Season 8 DVD set of the *Woodsmith Shop*! The set includes two DVDs with all the episodes plus a CD-ROM with bonus plans and articles. Collect the entire series by ordering individual seasons for $29.95 or save with package deals. Learn more at Woodsmith.com!

DVD Set: Season 8..... $29.95

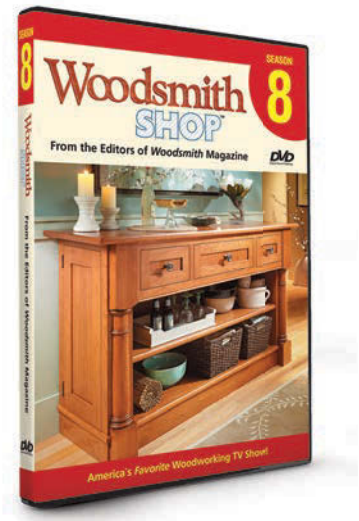

MAIL ORDER SOURCES

Project supplies may be ordered from the following companies:

Woodsmith Store
800-444-7527

Rockler
800-279-4441
rockler.com

amazon.com

American Woodcrafters
800-995-4032
americanwoodcrafterssupply.com

Enco
800-873-3626
use-enco.com

Grizzly Industrial
800-523-4777
grizzly.com

Hardware Source
877-944-6437
hardwaresource.com

Lee Valley
800-871-8158
leevalley.com

McMaster-Carr
630-833-0300
mcmaster.com

Northwest Bamboo, Inc.
503-695-3283
nwbamboo.com

Plyboo
866-835-9859
plyboo.com

Veneer Supplies
veneersupplies.com

Woodcraft
800-225-1153
woodcraft.com

Wood Kote
800-843-7666
woodkote.com

Woodworkers Source
800-423-2450
woodworkerssource.com

Zar
zar.com

looking inside
Final Details

▲ *Stylish Cherry Hutch.* This eye-catching hutch would be a great addition to any dining room. It offers loads of functional storage in a stylish, heirloom-quality package. Beginning on page 40, each step of the construction process is explained in detail.

▲ *Router Mortising Machine.* Transform the motor of an ordinary router into this precision mortising machine. All it requires are some basic materials and hardware. You'll find full details for building it beginning on page 30.

▲ *Spice Carousel.* This easy weekend kitchen project looks great and keeps all your favorite cooking spices close at hand. For a small project, it's still packed with interesting woodworking techniques. Turn to page 26 to get started.

► *Scissor-Lift Workbench.* Save your back and increase your shop's efficiency with this unique workbench. Using a lift cart as the base, it can be set to a wide range of heights to suit working on any project. Plans begin on page 20.